SIEMENS

Washing machine

WM6HXKE0DN

en User manual and assembly instructions

Register your product on My Siemens and discover exclusive services and offers.
siemens-home.bsh-group.com/welcome

The future moving in.

Siemens Home Appliances

Table of contents

Safety 4
General information 4
Intended use 4
Restriction on user group 5
Safe installation 5
Safe use 7
Safe cleaning and maintenance 9

Preventing material damage 11

Environmental protection and saving energy 12
Disposing of packaging 12
Save energy and conserve resources 12
Energy saving mode 13

Installation and connection 13
Unpacking the appliance 13
Contents of package 14
Requirements for the installation location 14
Removing the transit bolts 15
Removing the transport struts 16
Connecting the appliance 17
Aligning the appliance 18

Familiarising yourself with your appliance 20
Appliance 20
Detergent drawer 21
Controls 21

Display 22

Buttons 25

Programmes 28

Accessories 34

Before using for the first time 34
Starting an empty washing cycle 34

Laundry 35
Preparing the laundry 35
Sorting laundry 36
Degrees of soiling 36
Care symbols on the care labels 36

Detergents and care products 37
Detergent recommendation 37
Detergent dosage 38

Basic operation 38
Switching on the appliance 38
Setting a programme 39
Adjusting the programme settings 39
Loading laundry 39
Adding detergent and care product 40
Starting the programme 40
Soaking laundry 40
Adding laundry 40
Cancelling the programme 40
Resuming the programme when the programme status is Rinse Hold 41
Unloading the laundry 41
Switching off the appliance 41

Childproof lock 41
Activating the childproof lock 41
Deactivating the childproof lock 42

Intelligent dosing system 42
Filling the dispenser 42
Dispenser contents 43
Basic dosage 43

Home Connect 43
Home Connect settings 44
Connecting the appliance to a WLAN home network (Wi-Fi) with WPS function 44

Connecting the appliance to a WLAN home network (Wi-Fi) without WPS function 44
Connecting your appliance to the Home Connect app..... 45
Connecting the appliance to the energy manager 45
Activating Wi-Fi on the appliance... 46
Deactivating Wi-Fi on the appliance..... 47
Software update 47
Resetting the appliance network settings 47
Remote diagnostics 47
Data protection..... 47
Declaration of Conformity..... 48

Basic settings..... 49
Overview of basic settings 49
Changing the basic settings 49

Cleaning and servicing..... 50
Tips on appliance care..... 50
Cleaning the drum..... 50
Cleaning the detergent drawer 50
Descaling..... 52
Cleaning the drain pump..... 52
Cleaning the water outlet hose at the siphon..... 54
Cleaning the water inlet filter..... 55

Troubleshooting..... 57
Error code / Fault display / Signal..... 57
Malfunctions 59
Noise 62
Problem with results..... 63
Home Connect problem..... 65
Leakage..... 65
Odours..... 65
Emergency release 66

Transportation, storage and disposal 66
Removing the appliance 66
Inserting the transit bolts..... 66
Using the appliance again 67
Disposing of old appliance 67

Customer Service..... 68
Product number (E-Nr.) and production number (FD)..... 68
AQUA-STOP guarantee..... 68

Consumption values..... 70

Technical specifications..... 70

Safety

Please read the safety information to ensure that you use the appliance safely.

General information

You can find general information about this instruction manual here.

- Read this instruction manual carefully. Only this will ensure you use the appliance safely and efficiently.
- This manual is intended for the installer and the user of the appliance.
- Follow the safety instructions and warnings.
- Keep the instruction manual and the product information safe for future reference or for the next owner.
- Check the appliance after unpacking it. Do not connect the appliance if it has been damaged in transit.

Intended use

Read the information on intended use to ensure that you use the appliance correctly and safely.

Only use this appliance:

- According to this installation and instruction manual.
- For washing machine-washable fabrics and hand-washable wool in accordance with the care label.
- With tap water and commercially available detergents and care products suitable for washing machines.
- In private households and in enclosed spaces in a domestic environment.
- Up to an altitude of max. 4000 m above sea level.

Restriction on user group

Avoid risks to children and vulnerable persons.
This appliance may be used by children aged 8 or over and by people who have reduced physical, sensory or mental abilities or inadequate experience and/or knowledge, provided that they are supervised or have been instructed on how to use the appliance safely and have understood the resulting dangers.
Children must not play with the appliance.
Cleaning and user maintenance must not be performed by children unless they are being supervised.
Keep children under the age of 3 years and pets away from the appliance.

Safe installation

Take note of the safety instructions when installing the appliance.

⚠ **WARNING – Risk of electric shock!**

- Improper installation is dangerous.
  - ▶ Connect and operate the appliance only in accordance with the specifications on the rating plate.
  - ▶ Connect the appliance to a power supply with alternating current only via a properly installed socket with earthing.
  - ▶ The protective conductor system of the domestic electrical installation must be properly installed. The installation must have a sufficiently large cross section.
  - ▶ When using a residual current circuit breaker, only use a type with the ⌔ mark.
  - ▶ Never equip the appliance with an external switching device, e.g. a timer or remote control.
  - ▶ When the appliance is installed, the mains plug of the power cord must be freely accessible. If free access is not possible, an all-pole isolating switch must be installed in the permanent electrical installation according to the installation regulations.
  - ▶ When installing the appliance, check that the power cable is not trapped or damaged.

- If the insulation of the power cord is damaged, this is dangerous.
  - ▶ Never let the power cord come into contact with hot appliance parts or heat sources.
  - ▶ Never let the power cord come into contact with sharp points or edges.
  - ▶ Never kink, crush or modify the power cord.

⚠ **WARNING – Risk of fire!**
It is dangerous to use an extended power cord and non-approved adapters.
- ▶ Do not use extension cables or multiple socket strips.
- ▶ If the power cord is too short, contact Customer Service.
- ▶ Only use adapters approved by the manufacturer.

⚠ **WARNING – Risk of injury!**
- The high weight of the appliance may result in injury when lifted.
  - ▶ Do not lift the appliance on your own.
- If this appliance is not correctly installed in a washer-dryer stack, the installed appliance may fall.
  - ▶ Only stack the dryer on a washing machine using the connection kit from the dryer manufacturer . No other installation method is permitted.
  - ▶ Do not install the appliance in a washer-dryer stack if the dryer manufacturer does not offer a suitable connection kit.
  - ▶ Do not install appliances from different manufacturers and with varying depths and widths in a washer-dryer stack.
  - ▶ Do not install a washer-dryer stack on a platform; the appliances may tip over.

⚠ **WARNING – Risk of suffocation!**
Children may put packaging material over their heads or wrap themselves up in it and suffocate.
- ▶ Keep packaging material away from children.
- ▶ Do not let children play with packaging material.

⚠ **CAUTION – Risk of injury!**

- The appliance may vibrate or move when in use.
  - ▶ Place the appliance on a clean, even, solid surface.
  - ▶ Align the appliance using the appliance feet and a spirit level.
- If hoses and power cords have been laid incorrectly, this causes a tripping hazard.
  - ▶ Lay hoses and power cords in such a way that there is no risk of tripping.
- If the appliance is moved by holding onto protruding components, such as the appliance door, the parts may break off.
  - ▶ Do not move the appliance by holding onto protruding parts.

⚠ **CAUTION – Risk of cutting!**

Touching sharp edges on the appliance may lead to cuts.

- ▶ Do not touch the sharp edges on the appliance.
- ▶ Wear protective gloves when installing and transporting the appliance.

Safe use

Follow these safety instructions when using the appliance.

⚠ **WARNING – Risk of electric shock!**

- If the appliance or the power cord is damaged, this is dangerous.
  - ▶ Never operate a damaged appliance.
  - ▶ Never pull on the power cord to unplug the appliance. Always unplug the appliance at the mains.
  - ▶ If the appliance or the power cord is damaged, immediately unplug the power cord or switch off the fuse in the fuse box and turn off the water tap.
  - ▶ "Call Customer Service." → *Page 68*
  - ▶ Repairs to the appliance should only be carried out by trained specialist staff.
- An ingress of moisture can cause an electric shock.
  - ▶ Only use the appliance in enclosed spaces.

- ▶ Never expose the appliance to intense heat or humidity.
- ▶ Do not use steam- or high-pressure cleaners, hoses or sprays to clean the appliance.

⚠ **WARNING – Risk of harm to health!**
Children can lock themselves in the appliance, thereby putting their lives at risk.
- ▶ Do not install the appliance behind a door as this may obstruct the appliance door or prevent it from opening.
- ▶ With redundant appliances, unplug the power cord. Then cut through the cord and damage the lock on the appliance door beyond repair so that the appliance door will no longer close.

⚠ **WARNING – Risk of suffocation!**
Children may breathe in or swallow small parts, causing them to suffocate.
- ▶ Keep small parts away from children.
- ▶ Do not let children play with small parts.

⚠ **WARNING – Risk of poisoning!**
Detergents and care products may result in poisoning if consumed.
- ▶ If accidentally swallowed, seek medical advice.
- ▶ Keep detergents and care products out of the reach of children.

⚠ **WARNING – Risk of explosion!**
Laundry that has been pretreated with cleaning agents that contain solvents may cause an explosion in the appliance.
- ▶ Rinse pretreated laundry thoroughly with water before washing.

⚠ **CAUTION – Risk of injury!**
- The covering plate may break if you stand on or climb onto the appliance.
  - ▶ Do not stand on or climb onto the appliance.

- The appliance may tip over if you sit on or lean against the open door.
  - ▶ Do not sit on or lean against the appliance door.
  - ▶ Do not place any objects on the appliance door.
- Reaching into the drum while it is still turning may cause hand injuries.
  - ▶ Wait for the drum to come to a complete stop before reaching inside.

⚠ **CAUTION – Risk of burns!**
When washing at high temperatures, the glass in the appliance door becomes hot.
- ▶ Do not touch the appliance door when it is hot.
- ▶ Keep children away from the appliance door when it is hot.

⚠ **CAUTION – Risk of scalding!**
When you wash at high temperatures, the detergent solution gets hot.
- ▶ Do not touch the hot detergent solution.

⚠ **CAUTION – Risk of chemical burns!**
If the detergent drawer is opened, detergent and care products may spray out from the appliance. Contact with eyes or skin may cause irritation.
- ▶ Rinse eyes and/or skin thoroughly with clean water if they come into contact with detergents or care products.
- ▶ If accidentally swallowed, seek medical advice.
- ▶ Keep detergents and care products out of the reach of children.

Safe cleaning and maintenance

Take note of the safety instructions when cleaning and performing maintenance work on the appliance.

⚠ **WARNING – Risk of electric shock!**
- Improper repairs are dangerous.
  - ▶ Repairs to the appliance should only be carried out by trained specialist staff.

- ▶ Only use genuine spare parts when repairing the appliance.
- ▶ If the power cord of this appliance is damaged, it must be replaced by the manufacturer, the manufacturer's Customer Service or a similarly qualified person in order to prevent any risk.

■ An ingress of moisture can cause an electric shock.

- ▶ Do not use steam- or high-pressure cleaners, hoses or sprays to clean the appliance.

⚠ **WARNING – Risk of injury!**

The use of non-original spare parts and non-original accessories is dangerous.

- ▶ Only use the manufacturer's original spare parts and original accessories.

⚠ **WARNING – Risk of poisoning!**

Poisonous fumes may be given off if you use cleaning agents that contain solvents.

- ▶ Do not use cleaning agents that contain solvents.

Preventing material damage

Follow these instructions to avoid material damage and damage to the appliance.

ATTENTION!

- The functionality of the appliance may be impaired if you use the wrong quantity of fabric softener, detergent, care product or cleaning agent.
  - ▸ Follow the dosage recommendations from the manufacturer.
- Exceeding the maximum load capacity impairs the function of the appliance.
  - ▸ Observe the "maximum load capacity" → *Page 28* for each programme and do not exceed it.
- The appliance is secured for transportation using transit bolts. Transit bolts which have not been removed may result in material damage and damage to the appliance.
  - ▸ Before starting up the appliance, remove the transit bolts completely and keep them in a safe place.
  - ▸ Before transport, fit the transit bolts fully in order to prevent damage in transit.
- Material damage may be caused if the water inlet hose is connected incorrectly.
  - ▸ Tighten the screw connections on the water inlet until they are hand-tight.
  - ▸ Ideally, connect the water inlet hose directly to the water tap, without any additional connecting elements such as adapters, extensions, valves or similar.
  - ▸ Make sure that the valve housing for the water inlet hose does not come into contact with its surroundings and is not subjected to any external forces.
  - ▸ Ensure that the inner diameter of the water tap is at least 17 mm.
  - ▸ Make sure that the length of the thread on the connection to the water tap is at least 10 mm.
- If the water pressure is too high or too low, the appliance may not be able to operate properly.
  - ▸ Make sure that the water pressure in the water supply system is min. 100 kPa (1 bar) and max. 1000 kPa (10 bar).
  - ▸ If the water pressure exceeds the maximum value specified, a pressure-reducing valve must be installed between the drinking water connection and the hose set of the appliance.
  - ▸ Do not connect the appliance to the mixer tap of an unpressurised hot-water boiler.
- Modified or damaged water hoses may result in material damage and damage to the appliance.
  - ▸ Never kink, crush, modify or cut through water hoses.
  - ▸ Only use the water hoses supplied with the appliance or genuine spare hoses.
  - ▸ Never re-use water hoses that have been used before.
- Operating the appliance using water that is dirty or too hot may cause material damage.
  - ▸ Only operate the appliance with cold mains water.
- Unsuitable cleaning products may damage the surfaces of the appliance.
  - ▸ Do not use harsh or abrasive detergents.

- Do not use cleaning products with a high alcohol content.
- Do not use hard scouring pads or cleaning sponges.
- Clean the appliance with nothing but water and a soft, damp cloth.
- Remove all detergent residue, spray residue or other residues immediately if they come into contact with the appliance.

Environmental protection and saving energy

Help protect the environment by using your appliance in a way that conserves resources and by disposing of reusable materials properly.

Disposing of packaging

The packaging materials are environmentally compatible and can be recycled.

- Sort the individual components by type and dispose of them separately.

  Information about current disposal methods are available from your specialist dealer or local authority.

Save energy and conserve resources

If you follow these instructions, your appliance will use less electricity and less water.

Choose programmes with low temperatures and longer wash times and use "maximum load capacity" → *Page 28*.

+ Energy consumption and water consumption is most efficient.

Use the economy programme settings.

+ If you adjust the programme settings for a programme, the display shows the expected consumption.

"Add " → *Page 38* detergent based on the laundry's degree of soiling.

+ For light to normal soiling, a smaller amount of detergent is sufficient. Observe the dosage recommendation from the detergent manufacturer.

Reduce the washing temperature for lightly and normally soiled laundry.

+ At low temperatures, the appliance consumes less energy. For light to normal soiling, lower temperatures than indicated on the care label are also sufficient.

Set the maximum spin speed if you want to dry the laundry in a tumble dryer afterwards.

+ The drier the laundry, the shorter the programme duration when drying which, in turn, reduces energy consumption. A higher spin speed reduces the residual moisture in the laundry and increases the volume of the spin noise.

Wash the laundry without prewash.

+ Washing with prewash increases the programme duration and increases energy and water consumption.

The appliance has a continuous automatic load adjustment function.

+ Depending on the type of fabric and load capacity, the continuous automatic load adjustment function optimally adjusts the water consumption and programme duration.

The appliance comes with an Aqua-Sensor.

+ During the rinse cycle, the Aqua-Sensor checks the degree of turbidity of the rinsing water, and adjusts the duration and number of rinse cycles accordingly.

Energy saving mode

If you do not use the appliance for an extended period, it automatically switches to energy-saving mode. All displays go out and ▷⏸ flashes. Energy-saving mode ends when you use the appliance again, e.g. if you open or close the door.
If you do not use the appliance for an extended period, the appliance switches off automatically.

Installation and connection

You can find out where and how best to install your appliance here. You will also learn how to connect the appliance to the water and power supply.

Unpacking the appliance

1. Remove any packaging and protective covers completely from the appliance.
2. Check the appliance for visible damage.
3. **ATTENTION!** Objects remaining in the drum that are not designed for operation with the appliance may cause material damage and damage to the appliance.

▶ Remove these objects, along with all supplied accessories, from the drum before starting the appliance.

Open the door and remove the accessory from the drum.

Contents of package

After unpacking all parts, check for any damage in transit and completeness of the delivery.

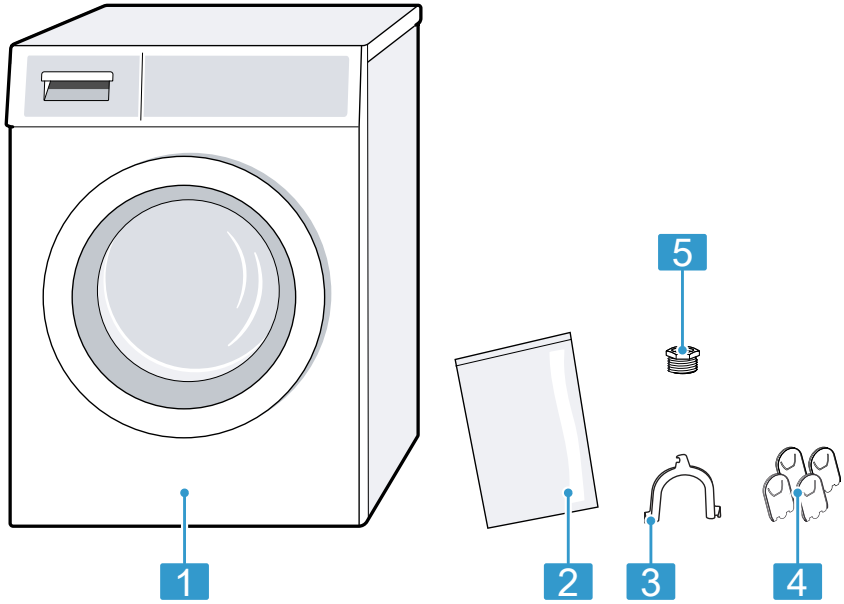

1	Washing machine
2	Accompanying documents
3	Elbow for fixing the water outlet hose
4	Cover caps
5	Connection adapter

Requirements for the installation location

The appliance may "wander" when it spins. Observe the instructions for the installation location.

Note: Please read the information in the "Safety" → *Page 4* and "Preventing material damage" → *Page 11* sections to ensure that you use the appliance safely.

⚠ **WARNING**
Risk of electric shock!
The appliance contains live parts. Touching live parts is dangerous.
- ▸ Do not operate the appliance without a cover cap.

⚠ **WARNING**
Risk of injury!
When using the appliance on a base, the appliance may tip over.
- ▸ Always secure the feet of the appliance to a base using the manufacturer's "fixing brackets" → *Page 34* before using the appliance for the first time.

ATTENTION!
- If the appliance is installed in areas exposed to frost or outdoors, frozen residual water may damage the appliance and frozen hoses may crack or split.
  - ▸ Do not install or operate this appliance anywhere that is liable to experience frost and/or outdoors.
- The appliance underwent a function test before leaving the factory and may, therefore, contain residual water. This residual water may leak out if the appliance is tilted at an angle greater than 40°.
  - ▸ Tilt the appliance carefully.

Installation location	Requirements
On a base 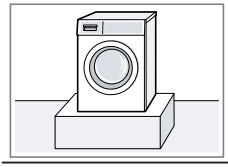	Secure the appliance with "fixing brackets" → *Page 34*.
On a wooden joist floor 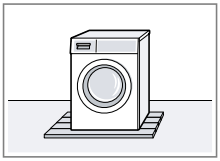	Place the appliance on a water-resistant wooden board which is screwed tightly to the floor. The wooden board should be at least 30 mm thick.
In a kitchen unit 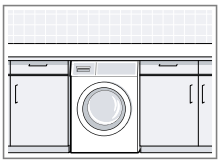	■ A niche width of 60 cm is required. ■ Only install the appliance underneath a continuous worktop that is securely connected to adjacent cabinets.
On a wall 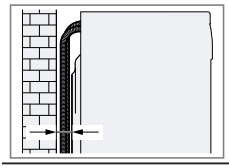	Do not trap the hoses between the wall and the appliance.

Removing the transit bolts

The appliance is secured for transportation using transit bolts on the rear of the appliance.

Notes
- Please read the information in the "Safety" → *Page 4* and "Preventing material damage" → *Page 11* sections to ensure that you use the appliance safely.
- Keep the transit bolts, screws and sleeves in a safe place for future "transport" → *Page 66*.

1. Pull the hoses out of the holders.

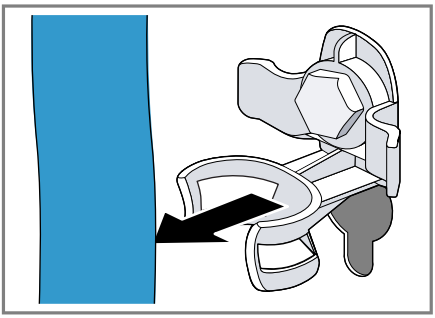

2. Unscrew ① and remove ② all four screws for the transit bolts with a WAF 13 wrench.

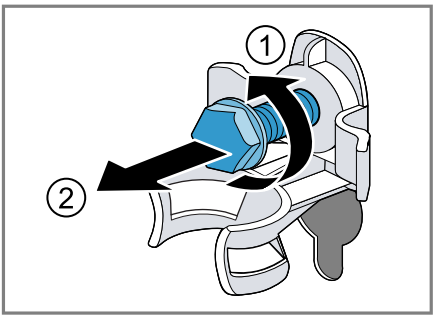

3. Pull the power cord out of the holder.

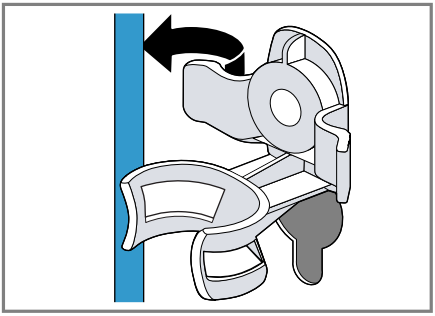

4. Remove the four sleeves.

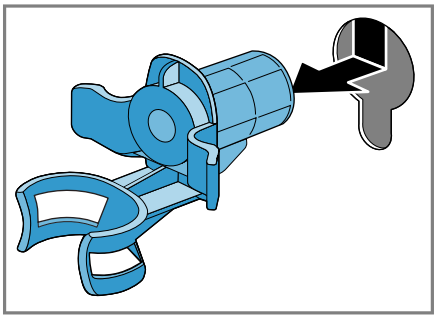

5. Put on the four cover caps.

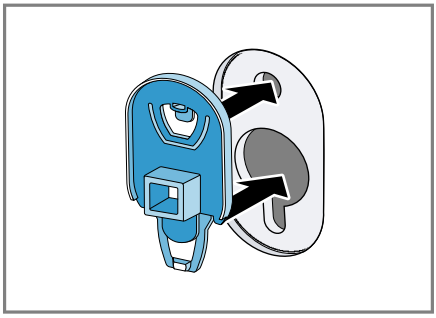

6. Press down on the four cover caps.

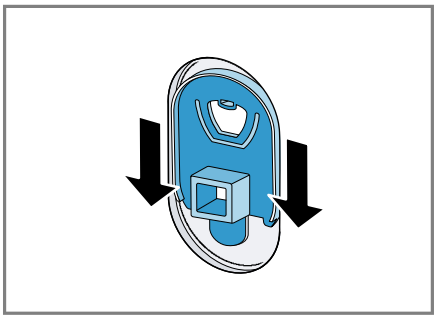

Removing the transport struts

Note: Please read the information in the "Safety" → *Page 4* and "Preventing material damage" → *Page 11* sections to ensure that you use the appliance safely.

1. Unscrew and remove the screws in the vertical transport struts using a T20 screwdriver.

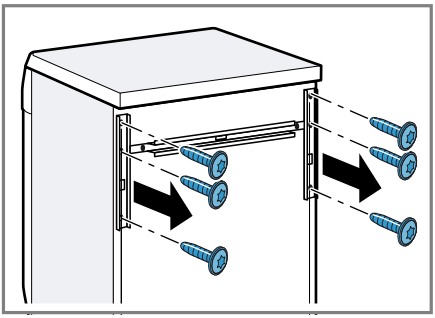

2. Remove the transport struts.

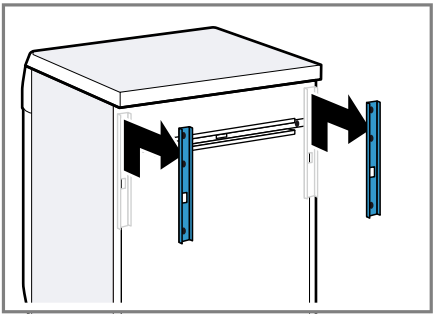

3. Undo and remove the screws in the horizontal transport strut using a T20 screwdriver.

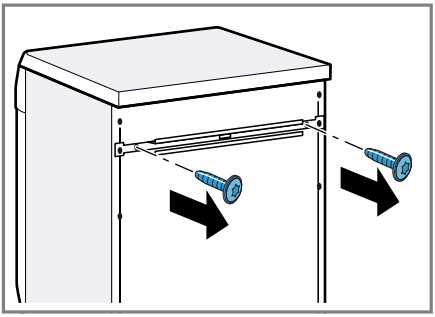

4. Remove the transport strut.

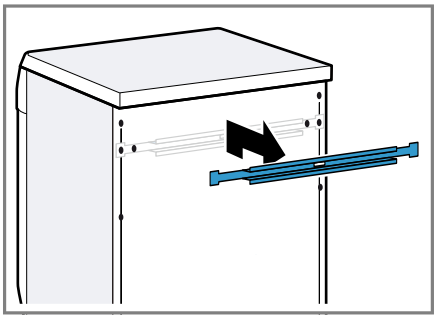

Connecting the appliance

Connect your appliance to the power supply, water inlet and water outlet.

Connecting the water inlet hose

Note: Please read the information in the "Safety" → *Page 4* and "Preventing material damage" → *Page 11* sections to ensure that you use the appliance safely.

⚠ **WARNING**
Risk of electric shock!
The appliance contains live parts. Touching live parts is dangerous.
- Do not immerse the electrical AquaStop valve in water.

1. Connect the water inlet hose to a tap (26.4 mm = 3/4").

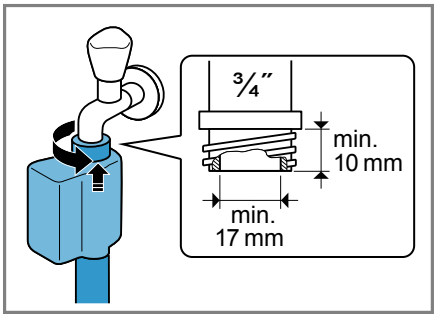

2. When connecting to a 21 mm = ½" tap, first fit the adapter with a sealing washer.

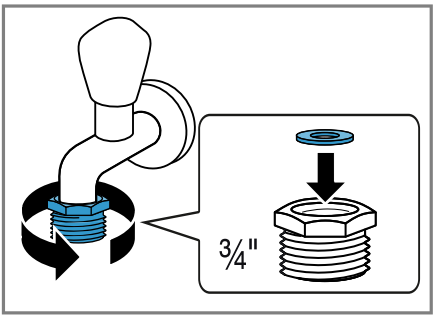

3. Open the water tap carefully and check that the connection points are tight.

Water outlet connection types

This information is intended to help you to connect this appliance to the water outlet.

Note: Please read the information in the "Safety" → *Page 4* and "Preventing material damage" → *Page 11* sections to ensure that you use the appliance safely.

ATTENTION!
When draining, the water outlet hose is subject to water pressure and may come loose from the installed connection point.

- Secure the water outlet hose against unintentional loosening.

Drainage into a siphon. Secure the connection point with a (24–40 mm) hose clamp.	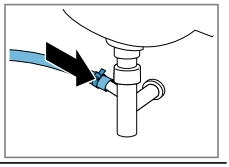
Drainage into a wash basin. Fix and secure the water outlet hose with an elbow.	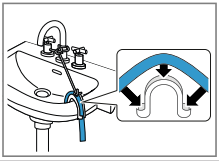
Drainage into a plastic pipe with rubber sleeve or into a gully. Fix and secure the water outlet hose with an elbow.	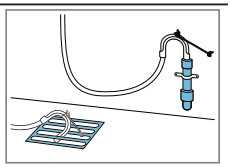

Connecting the appliance to the electricity supply

Note: Please read the information in the "Safety" → *Page 4* and "Preventing material damage" → *Page 11* sections to ensure that you use the appliance safely.

1. Insert the mains plug of the appliance's power cable in a socket nearby.

   The connection details of the appliance can be found under "Technical data" → *Page 70*.
2. Check the mains plug is inserted properly.

Aligning the appliance

In order to reduce noise and vibration and to prevent the appliance from moving, align the appliance correctly.

Note: Please read the information in the "Safety" → *Page 4* and "Preventing material damage" → *Page 11* sections to ensure that you use the appliance safely.

1. Loosen the lock nuts using a WAF 17 wrench by turning it in a clockwise direction.

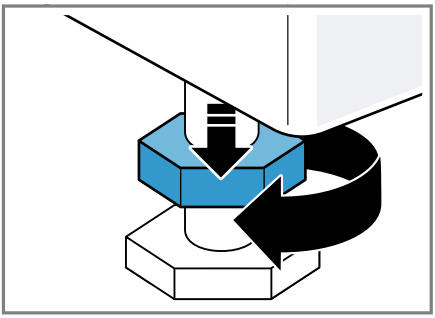

2. To align the appliance, turn the appliance feet. Check that the appliance is level using a spirit level.

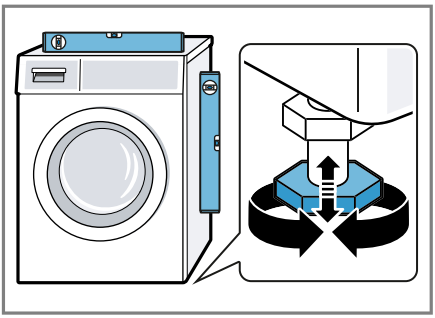

All appliance feet must stand firmly on the ground.

3. Screw the lock nuts tightly against the housing using a WAF 17 wrench.

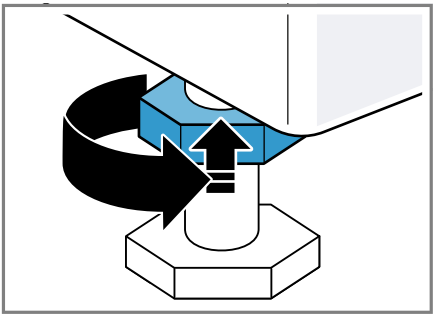

In doing so, hold the foot tight and do not adjust its height.

Familiarising yourself with your appliance

Familiarise yourself with the parts of your appliance.

Appliance

You can find an overview of the parts of your appliance here.

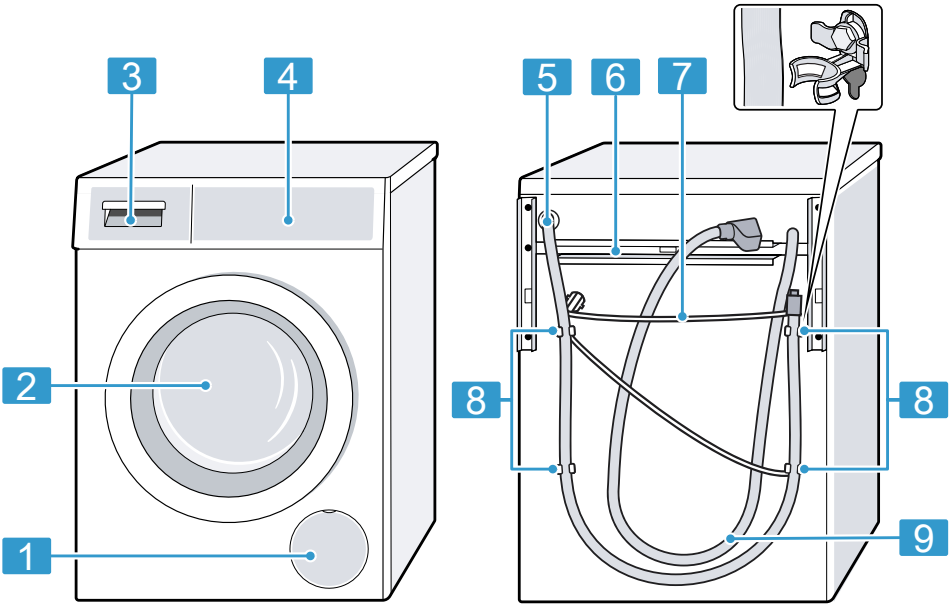

On certain models, specific details such as the colour and shape may differ from those pictured.

1	"Maintenance flap for the drain pump" → *Page 52*
2	Door
3	"Detergent drawer" → *Page 21*
4	"Controls" → *Page 21*
5	"Water outlet hose" → *Page 18*
6	"Transport struts" → *Page 16*
7	"Power cord" → *Page 18*
8	"Transit bolts" → *Page 15*
9	"Water inlet hose" → *Page 17*

Detergent drawer

Below is an overview of the structure of the detergent drawer.

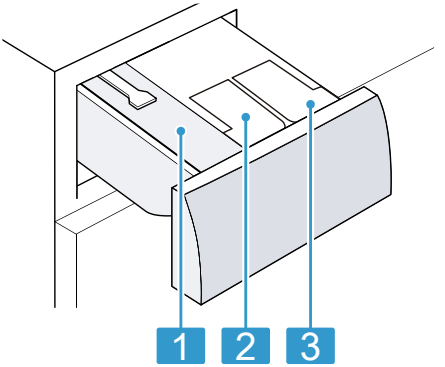

1	Manual dosing compartment
2	❀ / 🏷 : Dispenser for fabric softener or detergent
3	🏷 : Dispenser for detergent

Controls

The controls are used to configure all functions of your appliance and to obtain information about the operating status.

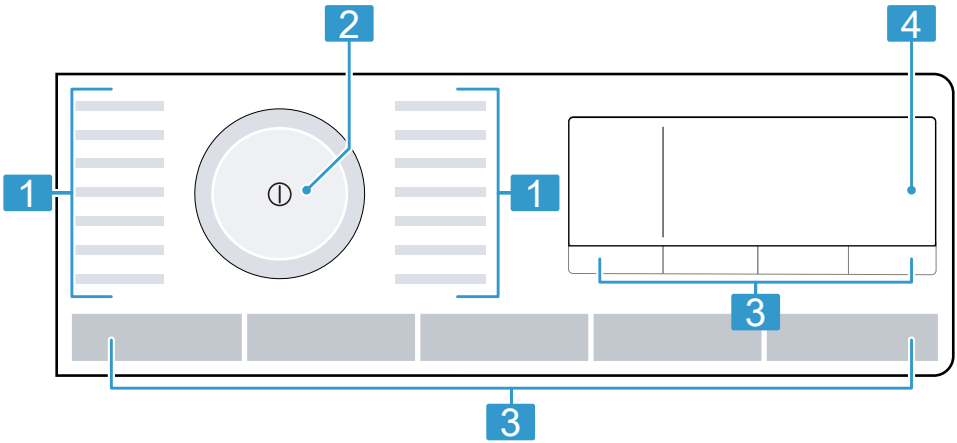

1	"Programmes" → *Page 28*
2	"Programme selector" → *Page 38*
3	"Buttons" → *Page 25*
4	"Display" → *Page 22*

Display

The display shows the current settings, options or relevant information.

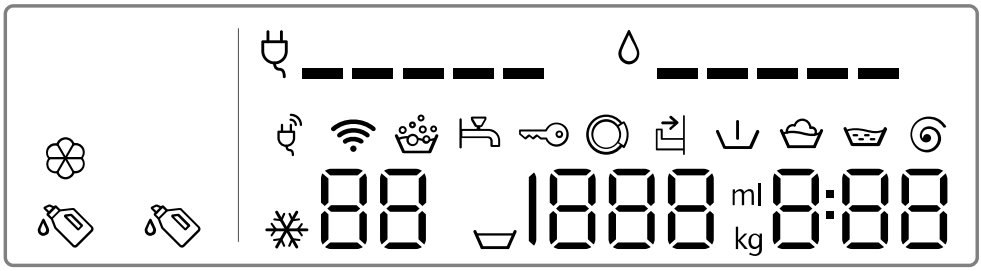

Display	Designation	Description
0:40 [1]	Programme duration/ programme time remaining	Approximate expected programme duration or programme time remaining.
10h [1]	"Ready in" time	The programme end has been set and the remaining number of hours is displayed. → *"Buttons", Page 25*
10 kg [1]	Recommended load	The maximum load capacity for the selected programme in kg.
- 1600	Spin speed	Set spin speed in rpm. → *"Buttons", Page 25* 0= No final spin, only draining : Rinse Hold, no draining
– 90	Temperature	Set temperature in °C. → *"Buttons", Page 25* (cold)
	Prewash	Programme status
	Wash	Programme status
	Rinse	Programme status
	Spin	Programme status
-P-	Pause	Programme status

[1] Example

Display	Designation	Description
End	End of programme	Programme status
	Childproof lock	■ Lights up: The childproof lock is activated. ■ Flashes: The childproof lock is active and the programme selector has been adjusted. → *"Deactivating the childproof lock", Page 42*
	Energy consumption	Energy consumption for the selected programme. ■ — : Low energy consumption ■ ————— : High energy consumption
	Water consumption	Water consumption for the selected programme. ■ — : Low water consumption ■ ————— : High water consumption
	Wi-Fi	■ Lights up: The appliance is connected to your home network. ■ Flashes: The appliance is trying to connect to your home network. → *"Home Connect ", Page 43*
	Energy manager	The appliance is connected to the smart energy system (energy manager). → *"Connecting the appliance to the energy manager", Page 45*
	Dispenser for liquid detergent	■ Lights up: The intelligent dosing system for liquid detergent is activated. ■ Flashes: The fill level of the dispenser is below the minimum level. → *"Intelligent dosing system", Page 42* (liquid detergent)
	Dispenser for liquid detergent or fabric softener.	■ Lights up: The intelligent dosing system for liquid detergent or fabric softener is activated. ■ Flashes: The fill level of the dispenser is below the minimum level. → *"Intelligent dosing system", Page 42* (liquid detergent) (fabric softener)
50 ml [1]	Basic dosage	Basic dosage for detergent or fabric softener. → *"Basic dosage", Page 43*
	Foam detection system	The appliance has detected too much foam. → *"Error code / Fault display / Signal", Page 57*
	Door	The door is unlocked and can be opened.

[1] Example

Display	Designation	Description
	Tap	■ No water pressure. → *"Error code / Fault display / Signal", Page 57* ■ The water pressure is too low.
	Detergent drawer	The detergent drawer has not been pushed in fully. → *"Error code / Fault display / Signal", Page 57*
E:60 / -2B [1]	Error	Error code, error display, signal. → *"Error code / Fault display / Signal", Page 57*

[1] Example

Buttons

Below is an overview of the buttons and their setting options.
The selection of programme settings depends on the selected programme. You can see the selection options for each programme in the overview for
→ *"Programmes", Page 28*.

Button	Selection	Description
▷II (Start/Reload/ Pause)	■ Start ■ Cancel ■ Pause	Start, cancel or pause the programme.
varioSpeed	■ Activate ■ Deactivate	Activate or deactivate a short washing programme. **Note:** Energy consumption increases. The washing result is not affected by this.
1	■ Activate ■ Deactivate ■ Basic dosage	Briefly press the button to activate or deactivate the intelligent dosing system for liquid detergent . Press the button for approx. 3 seconds to set the basic dosage. → *"Intelligent dosing system", Page 42*
2	■ Activate ■ Deactivate ■ Dispenser contents ■ Basic dosage	Briefly press the button to activate or deactivate the intelligent dosing system for fabric softener or liquid detergent . Press the button for approx. 3 seconds to specify the contents of the dispenser or set the basic dosage. → *"Intelligent dosing system", Page 42*
- + (Ready in)	1–24 hours	Set the programme end. The programme duration is already included in the set number of hours. Once the programme has started, the programme duration is displayed.
°C (Temperature Selection)	– 90 °C	Adjust the temperature in °C.
(Spin Speed Reduction)	- 1600	Adjust the spin speed or activate (Rinse Hold). If is selected, the water is not drained at the end of the washing cycle and the spin cycle is deactivated. The laundry remains in the water used for rinsing.
(mains switch)	■ Switch on ■ Switch off	Switch the appliance on or off.

Button	Selection	Description
(Remote Start)	■ Activate ■ Deactivate ■ Open the Home Connect menu	If you briefly press the button, the appliance will be enabled for remote start via the Home Connect app If you press the button for approx. 3 seconds, the Home Connect menu opens. **Notes** ■ Remote start cannot be activated for safety reasons in the following circumstances: – The door is open. – The detergent drawer has not been pushed in fully. ■ Remote start is deactivated for safety reasons in the following circumstances: – Open the door. – Press ▷II. – Press . – Switch off the appliance. – Following a power cut.
3 sec. (Child Lock 3 sec..)	■ Activate ■ Deactivate	Activate or deactivate the childproof lock. Disable the control panel to prevent unwanted or accidental operation. If the childproof lock is activated and the appliance has been switched off, the childproof lock remains activated. → *"Childproof lock", Page 41*
(Spin Speed Reduction)	Basic settings	Change the basic settings for the appliance. → *"Changing the basic settings", Page 49*
(Pre-wash)	■ Activate ■ Deactivate	Activate or deactivate prewash, e.g. for washing heavily soiled laundry. **Note:** If the intelligent dosing system is activated, the detergent will be dispensed automatically for the prewash and the main wash. If the intelligent dosing system is deactivated, place the detergent for the prewash directly in the drum.
3x (Power Rinse x3)	■ Activate ■ Deactivate	Activate or deactivate three additional rinse cycles. Recommended for particularly sensitive skin or in regions with very soft water.
(Easy Iron)	■ Activate ■ Deactivate	Activate or deactivate the reduced creasing programme. In order to reduce creasing in the laundry, the spin cycle and the spin speed are adapted.

Button	Selection	Description
		The laundry is damp enough after washing that it needs to be hung out on a washing line.

Programmes

Below is an overview of the programmes. You can find information on the load and on the adjustable programme options.

Tip: The laundry's care labels provide you with additional information on programme selection.
→ *"Care symbols on the care labels", Page 36*

Programme	Description	Max. load (kg)	Max. temperature (°C) [1]	Max. spin speed (rpm) [1]	varioSpeed	3x	(Rinse Hold)				
Cotton	Wash hard-wearing items made from cotton, linen or blended fabrics. Also suitable as a short programme for normally soiled laundry when you activate varioSpeed. If varioSpeed is activated, the maximum load capacity is reduced to 5 kg.	10	90	1600	●	●	●	●	●	●	●
Cotton Colour	Wash hard-wearing items made from cotton, linen or blended fabrics. Energy-saving programme. **Note:** To save energy, the actual washing temperature may deviate from the set washing temperature. The washing performance meets legal requirements.	10	90	1600	–	●	●	●	●	●	●

[1] Programme setting

Programme	Description	Max. load (kg)	Max. temperature (°C) [1]	Max. spin speed (rpm) [1]	varioSpeed	3x	(Rinse Hold)				
Eco 40-60	Wash items made from cotton, linen or blended fabrics. Suitable for normally soiled items. **Note:** Textiles which can be washed as per the care symbol 40 at 40 °C or 60 at 60 °C can be washed together. In order to achieve the best possible energy efficiency, the optimum washing temperature for this programme was saved. The washing temperature is activated and cannot be changed.	10	–	1600	–	●	●	●	●	●	●
Easy Care	Wash items made from synthetic or blended fabrics.	4	60	1200	●	●	●	●	●	●	●
Mix	Wash items made from cotton, linen, or synthetic or blended fabrics. Suitable for lightly soiled laundry.	4	60	1600	●	●	●	●	●	●	●
Delicate/Silk	Wash delicate, washable items made from silk, viscose and synthetics. Use a detergent that is suitable for delicates or silk.	2	40	800	–	●	●	●	●	●	●

[1] Programme setting

Programme	Description	Max. load (kg)	Max. temperature (°C) [1]	Max. spin speed (rpm) [1]	varioSpeed	3x	(Rinse Hold)				
	Note: Wash especially delicate items or items with hooks, eyelets or clips in a mesh laundry bag.										
Wool	Hand- or machine-washable items that are made from wool or contain wool. To prevent the laundry from shrinking, the drum moves the items very gently with long pauses. Use a detergent that is suitable for wool.	2	40	800	–	–	●	–	–	–	●
Rinse	Rinses and then spins the laundry, and then drains the water.	–	–	1600	–	●	●	–	●	–	●
Spin/Drain	Spins and drains the water. If you only want to drain the water, activate 0. The laundry is not spun.	–	–	1600	–	–	–	–	●	–	–
Automatic 30°C	Wash delicate items made from cotton, synthetic or blended fabrics. Gentle laundry care. The degree of soiling and the type of fabric are automatically detected. The washing process is adapted.	3,5	30	1000	–	–	●	–	–	●	●

[1] Programme setting

Programme	Description	Max. load (kg)	Max. temperature (°C) [1]	Max. spin speed (rpm) [1]	varioSpeed	3x	(Rinse Hold)				
Drum Clean	Cleaning and caring for the drum. Use this programme in the following cases: ■ Before using the appliance for the first time ■ If you regularly wash at temperatures of 40 °C or lower ■ After a prolonged period of non-use Use washing powder or a detergent containing bleach. Halve the amount of detergent to avoid foaming. Do not use fabric softener. Do not use liquid detergent or detergent that is intended for woollens or delicates. **Note:** The drum cleaning indicator will flash to remind you if you have not used a programme at 60 °C or higher for a long time.	–	–	1200	–	–	–	–	–	–	–

[1] Programme setting

Programme	Description	Max. load (kg)	Max. temperature (°C) [1]	Max. spin speed (rpm) [1]	varioSpeed	3x	(Rinse Hold)				
Outdoor/Water-proofing	Wash all-weather and outdoor clothing with membrane technology and water-resistant equipment. Suitable for washing and then water-proofing. Use a detergent for outdoor fabrics. Use a waterproofing agent that is suitable for machine-washing. Place the detergent for outdoor fabrics in the manual dosing compartment. If the programme stops before the last rinse cycle, add the waterproofing agent to the manual dosing compartment. Press ▷II to resume the programme. → *"Detergent drawer", Page 21* After-treat the laundry in accordance with the manufacturer's instructions.	1	40	800	–	●	●	–	–	–	–
powerSpeed 59'	Wash items made from cotton, linen, or synthetic or blended fabrics. Suitable for lightly and normally soiled laundry.	5	40	1400	–	●	●	●	●	●	●

[1] Programme setting

Programme	Description	Max. load (kg)	Max. temperature (°C) [1]	Max. spin speed (rpm) [1]	varioSpeed	3x	(Rinse Hold)				
	Optimum washing results in under an hour.										
Super 15'/30'	Wash items made from cotton, synthetic or blended fabrics. Short programme for small items of lightly soiled laundry. The programme duration is approx. 30 minutes. If you wish to reduce the programme duration to 15 minutes, activate varioSpeed. The maximum load is reduced to 2 kg.	4	40	1200	●	●	●	–	–	●	●

[1] Programme setting

Accessories

Only use original accessories. These have been made especially for your appliance. Here you can find an overview of your appliance's accessories and how to use them.

	Use	Order number
Water inlet hose extension	Extend the water inlet hose for cold water or AquaStop (approx. 2.50 m).	WZ10131
Fixing brackets	Improves the stability of the appliance.	WX975600

Before using for the first time

Prepare the appliance for use.

Starting an empty washing cycle

Your appliance was inspected thoroughly before leaving the factory. To remove any residual water, run the first wash cycle without any laundry.

Note: Please read the information in the "Safety" → *Page 4* and "Preventing material damage" → *Page 11* sections to ensure that you use the appliance safely.

1. Press ⏻.

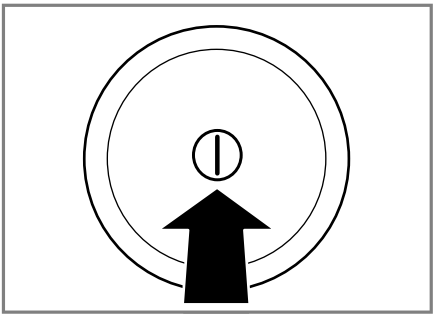

It may take a few seconds for the appliance to switch on.

2. Set the **Drum Clean** programme.
3. Close the door.
4. Pull out the detergent drawer.

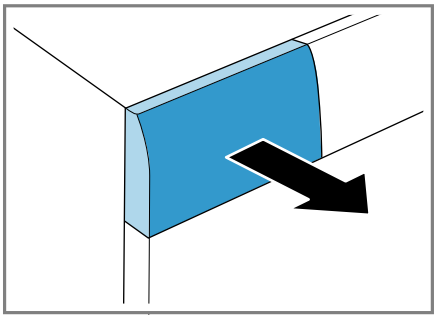

5. Pour approx. 1 litre of water into the manual dosing compartment.

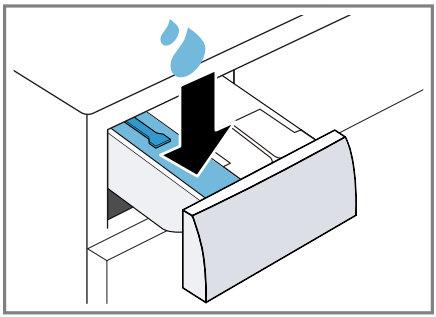

6. Add washing powder to the manual dosing compartment.

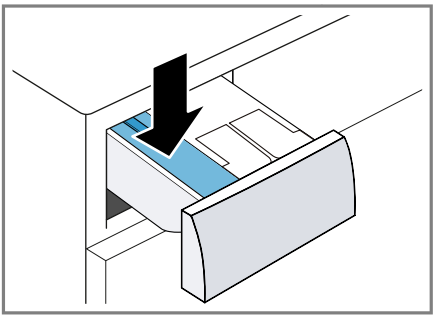

To prevent foaming, use only half of the amount of detergent recommended by the detergent manufacturer for light soiling. Do not use detergent suitable for woollens or delicates.

7. Push in the detergent drawer.

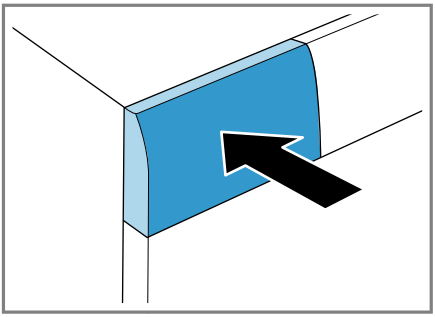

8. Press ▷II **(Start/Reload/Pause)** to start the programme.
✔ The display shows the remaining programme duration.
✔ After the programme has ended, the display shows: **End**.
9. Start the first wash cycle or press ⏻ to switch off the appliance.
→ *"Basic operation", Page 38*

Laundry

You can wash all items that the manufacturer has marked as machine-washable on the care label and fabrics made from hand-washable wool using your appliance.

Preparing the laundry

ATTENTION!
Objects remaining in the laundry may damage the laundry and the drum.

- Remove all items from any pockets in your laundry before using the appliance.

- To protect your appliance and the laundry, prepare the laundry beforehand.
  - Empty all pockets
  - Brush sand out of all collars and pockets
  - Close bed covers and cushion covers
  - Close all zips, Velcro fasteners, hooks and eyes
  - Tie cloth belts and apron strings together or use a mesh laundry bag
  - Remove curtain hooks and lead strips or use a mesh laundry bag
  - Use a mesh laundry bag for small items of laundry such as children's socks
  - Separate items of laundry and shake them out
  - Wash large and small items of laundry together
  - Dab fresh stains with soapy water (do not rub them)
  - Some stubborn or dried-in stains can be removed by washing several times

Sorting laundry

Note: Please read the information in the "Safety" → *Page 4* and "Preventing material damage" → *Page 11* sections to ensure that you use the appliance safely.

▸ To improve washing results and prevent discolouration, sort the laundry according to the following criteria before washing.

– Type of fabric and fibre type
– Whites
– Colours
  Wash new coloured items separately the first time you wash them.
– "Soiling" → *Page 36*
– "Care symbols on the care labels" → *Page 36*

Degrees of soiling

Degree of soiling	Soiling	Examples
Light	■ No dirt or stains are visible ■ Laundry has absorbed odours	Light summer clothing or sports clothing that has been worn for a just a few hours
Normal	Dirt or light stains are visible	■ T-shirts, shirts or blouses are sweat-soaked or have been worn a few times ■ Towels or bedding that has been used for up to one week
Heavy	Dirt or stains are clearly visible	Tea towels, baby items or work clothing

Care symbols on the care labels

The symbols indicate the recommended programme and the numbers in the symbols indicate the maximum recommended washing temperature.

Symbol	Washing process	Recommended programme
95 60 40 30	Normal	Cottons
60 40 30	Gentle	Easy Care
40 30	Particularly gentle	Delicates/Silk for washing by hand
	Hand wash	Wool
	Not suitable for machine-washing	–

Tip: You can find more information about care symbols at www.ginetex.ch.

Detergents and care products

You can protect your appliance and your laundry by selecting and using the correct detergents and care products. You can use all detergents and care products which are suitable for domestic washing machines.

Note: Please read the information in the "Safety" → *Page 4* and "Preventing material damage" → *Page 11* sections to ensure that you use the appliance safely.

The manufacturer's instructions for use and dosage can be found on the packaging.

Notes

- Only use liquid detergents that are self-flowing
- Do not mix different liquid detergents
- Do not mix detergent and fabric softener
- Do not use products which have developed a top layer or are highly congealed
- Do not use products containing solvents, caustic agents or volatile substances (e.g. bleach)
- Use dyes sparingly as salt may damage stainless steel
- Do not use bleaching agents in the appliance

Detergent recommendation

This information helps you to choose the right detergent for your fabrics.

Detergent	Fabrics	Programme	Temperature
Standard detergent with optical brighteners	Heat-resistant white fabrics made from cotton or linen	Cottons	From cold up to 90 °C
Detergent for colours without bleach or optical brighteners	Coloured fabrics made from linen or cotton	Cottons	From cold up to 60 °C
Detergent for colours/delicates without optical brighteners	Coloured fabrics made from easy-care fibres or synthetic materials	Easy Care	From cold up to 60 °C
Detergent for delicates	Delicate fabrics made from silk or viscose	Delicates/Silk	From cold up to 40 °C
Detergent for woollens	Wool	Wool	From cold up to 40 °C

Tip: Visit www.cleanright.eu to find further information on detergents, care products and cleaning agents for domestic use.

Detergent dosage

Use the correct detergent dosage to achieve optimal washing results and save resources.
The detergent dosage depends on:
- The amount of laundry
- Degree of soiling
- Water hardness
  You can find out how hard your water is from your local water company or measure it yourself using a water hardness tester.

Water hardness

Hardness range	Total hardness in mmol/l	German degrees in °dH
soft (I)	0–1.5	0–8.4
medium (II)	1.5– 2.5	8.4–14
hard (III)	over 2.5	over 14

Example of a manufacturer's instructions for detergent
These example values refer to a standard load of 4–5 kg.

Soiling	Light	Normal	Heavy
Water hardness: Soft/medium	40 ml	55 ml	80 ml
Water hardness: Hard/very hard	55 ml	80 ml	105 ml

The dosages can be found on the manufacturer's packaging.
- If you are not using manual dosage, adjust the dosage to the actual load.
- If intelligent dosing is activated, do not adjust the dosage to the actual load capacity. The quantity of detergent and fabric softener is automatically calculated via the "basic dosage" → *Page 43* and the amount of laundry detected. The basic dosage setting must always comply with the dosage for a load of 4.5 kg.

Basic operation

You can find out everything you need to know about operating your appliance here.

Switching on the appliance

▸ Press ⏻.

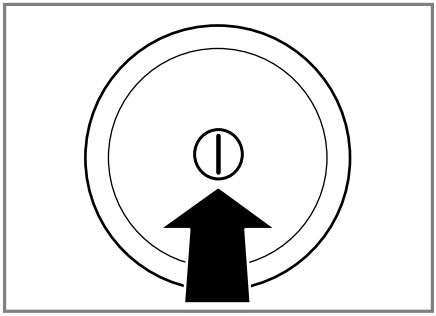

It may take a few seconds for the appliance to switch on.

✔ The appliance performs an audible function test in the detergent drawer.
→ *"Noise", Page 62*

Note: The drum is lit up after the door is opened and closed and once the programme has started. The light goes out automatically.

Setting a programme

1. Set the programme selector to the required "programme" → *Page 28*.

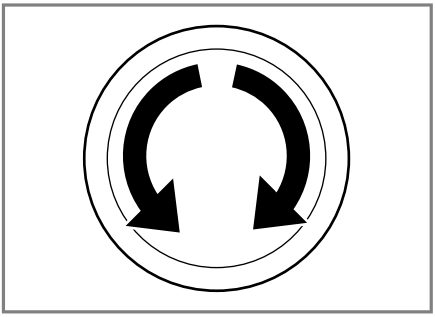

2. If necessary, "adjust the programme settings" → *Page 39*.

Adjusting the programme settings

Depending on the programme and programme progress, you can adjust or activate/deactivate the settings.

Note: Overview of all programme settings:
→ *"Buttons", Page 25*

Requirement: A programme has been set.

▸ Adjust the programme settings.

The programme settings are not saved permanently for the programme.

Note: The setting is saved if you activate or deactivate the intelligent dosing system.

Loading laundry

Notes

- Please read the information in the "Safety" → *Page 4* and "Preventing material damage" → *Page 11* sections to ensure that you use the appliance safely.
- To prevent creasing, take note of the maximum load for the relevant "programme" → *Page 28*.

Requirement: Prepare and sort the laundry.
→ *"Laundry", Page 35*

1. Open the door.

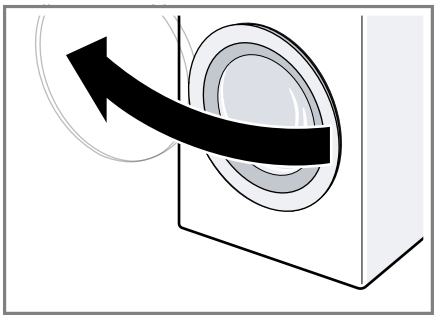

2. Ensure that the drum is empty.
3. Separate the laundry and place it in the drum.
4. **Note:** Ensure that there is no laundry trapped in the door.

   Close the door.

Adding detergent and care product

For programmes in which intelligent dosing is not possible or desirable, you can add detergent to the manual dosing compartment.

Note: Please read the information in the "Safety" → *Page 4* and "Preventing material damage" → *Page 11* sections to ensure that you use the appliance safely.

Tip: In addition to intelligent dosing, you can also add additional care product for laundry, e.g. stain remover, starch or bleach, to the manual dosing compartment. Do not add any additional detergent to the manual dosing compartment to avoid overdosage and/or foaming.

Requirement: Find out the optimum dosage for "detergent and care product." → *Page 37*

1. Pull out the detergent drawer.
2. Pour in detergent.
   → *"Detergent drawer", Page 21*
3. If required, add the care product.
4. Push in the detergent drawer.

Starting the programme

Note: If you want to change the time until the programme ends, set the "Ready in" time first.

- ▸ Press ▷II.
- ✔ The drum rotates and load detection takes place. This can take up to 2 minutes, after which water enters the drum.
- ✔ The display shows either the programme duration or the "Ready in" time.
- ✔ After the programme has ended, the display shows: **End**.

Soaking laundry

You can soak the laundry before washing in the appliance by pausing the programme.

Note: No additional detergent is required. The washing solution is then used for washing.

1. Start the programme.
2. To pause the programme, after approx. 10 minutes, press ▷II.
3. To resume the programme, after the desired soaking time, press ▷II .

Adding laundry

Note: Please read the information in the "Safety" → *Page 4* and "Preventing material damage" → *Page 11* sections to ensure that you use the appliance safely.

1. Press ▷II.

   The appliance is paused and checks whether it is possible to add or remove laundry. Take note of the programme status.
   → *"Display", Page 22*
2. Add or remove laundry.
3. Close the door.
4. Press ▷II.

Cancelling the programme

Once the programme has started, you can cancel it at any time.

Note: Please read the information in the "Safety" → *Page 4* and "Preventing material damage" → *Page 11* sections to ensure that you use the appliance safely.

1. Press ▷II.
2. Open the door.

The appliance door remains locked for safety reasons if the temperature and water levels are high.
- If the temperature is high, start the **Rinse** programme.
- If the water level is high: Start the or programme.

3. Remove the laundry.

Resuming the programme when the programme status is Rinse Hold

1. Set the or programme.
2. Press ▷II.

Unloading the laundry

Note: Please read the information in the "Safety" → *Page 4* and "Preventing material damage" → *Page 11* sections to ensure that you use the appliance safely.

1. Open the door.
2. Remove the laundry.

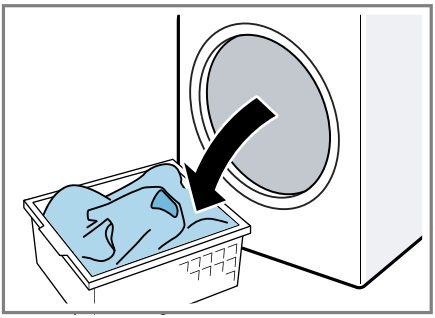

Switching off the appliance

1. Press ①.

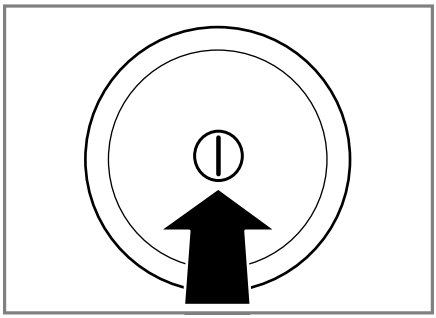

2. Wipe the rubber gasket dry and remove any foreign objects.

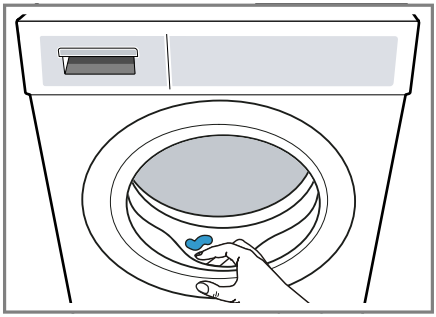

3. Leave the door and detergent drawer open so that residual water can evaporate.

Childproof lock

Secure your appliance against being operated unintentionally using the controls.

Activating the childproof lock

- ▸ Press and hold the two **3 sec.** buttons for approx. 3 seconds.
- ✔ The display shows .
- ✔ The controls are locked.
- ✔ The childproof lock remains active even after the appliance has been switched off.

Deactivating the childproof lock

Requirement: To deactivate the childproof lock, the appliance must be switched on.

- Press and hold the two **3 sec.** buttons for approx. 3 seconds.

  So that the programme currently running is not cancelled, the programme selector must be set to the initial programme.

✔ goes out in the display.

Intelligent dosing system

Your appliance has an intelligent dosing system for liquid detergent and fabric softener.
The optimum quantities of liquid detergent and fabric softener are dispensed automatically depending on the programme and settings. The intelligent dosing system has been activated at the factory for all the designated "programmes" → *Page 28* and can be deactivated for each one individually. In all other programmes, you can manually add detergent.
→ *"Adding detergent and care product", Page 40*

Filling the dispenser

Note
In order to use intelligent dosing, fill the dispenser.

- Fill the dispenser only with suitable "detergent and care products" → *Page 37*.
- If you change the liquid detergent or fabric softener, empty and clean the dispenser beforehand.
  → *"Cleaning the detergent drawer", Page 50*
- If you want to use both dispensers for liquid detergent, adjust the "contents of the dispenser" → *Page 43*.

Requirement: / flashes.

1. Pull out the detergent drawer.
2. Open the dispenser lid.

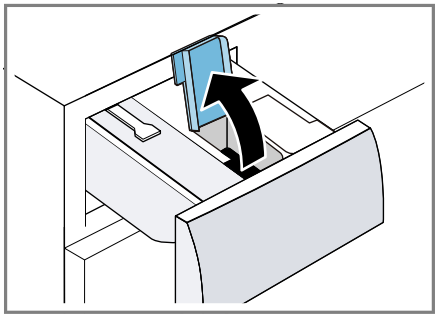

3. Pour liquid detergent and fabric softener into the relevant dispensers.
   → *"Detergent drawer", Page 21*

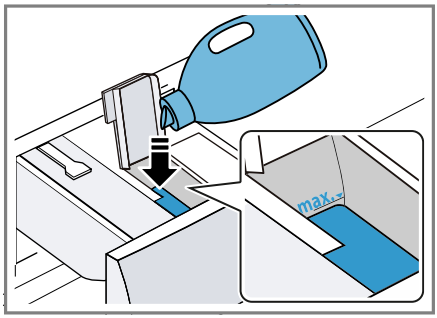

4. Close the dispenser lid.

   Note: To prevent the detergent from drying out or drying up, do not leave the dispenser lid open for a long period of time.
5. Push in the detergent drawer.
6. Adjust the "basic dosage" → *Page 43*.

Dispenser contents

When it leaves the factory, the dispenser is set for fabric softener ❀ . Alternatively, you can also use this dispenser for a second liquid detergent 🏷 .

Notes

- If you change the content of the dispenser, the basic dosage for this dispenser is reset.
- If you use both dispensers for liquid detergent, you must select a dispenser which is to be used during washing.

Adjusting the dispenser contents

1. Press and hold 2 for approx. 3 seconds.
2. To set 🏷 , press 2.
✔ The display shows 🏷 .
3. To set ❀ , press 2 again.
4. To end the setting process, wait briefly.

Basic dosage

You can adjust the preset basic dosages for liquid detergent and fabric softener.
The basic dosage depends on the manufacturer's instructions for the detergent, the water hardness and the degree of soiling of the laundry.
Always set a basic dosage that corresponds to the dosage for a standard load of 4.5 kg.
→ *"Detergent dosage", Page 38*

Adjusting the basic dosage

You can individually adjust the basic dosages for each dispenser.

1. Press and hold 1 for approx. 3 seconds.
✔ The display shows the basic dosage set for 🏷 .
2. To adjust the setting, press .
3. To end the setting process, wait briefly.

Note: To adjust the basic dosage for ❀ , repeat the steps with 2.

Home Connect

This appliance is network-capable. Connecting your appliance to a mobile device lets you control its functions via the Home Connect app, adjust its basic settings and monitor its operating status.
The Home Connect services are not available in every country. The availability of the Home Connect function depends on the availability of Home Connect services in your country. You can find information about this at: www.home-connect.com.

- → *"Connecting the appliance to a WLAN home network (Wi-Fi) with WPS function", Page 44*
- → *"Connecting the appliance to a WLAN home network (Wi-Fi) without WPS function", Page 44*

The Home Connect app guides you through the entire login process. Follow the instructions in the Home Connect app to configure the settings.

Tips

- Please consult the documents supplied by Home Connect.
- Please also follow the instructions in the Home Connect app.

Notes

- Please note the safety precautions in this instruction manual and make sure that they are also observed when operating the appliance via the Home Connect app.
→ *"Safety", Page 4*

- Operating the appliance on the appliance itself always takes priority. During this time it is not possible to operate the appliance using the Home Connect app.

Home Connect settings

Adapt Home Connect to your needs. You can find the Home Connect settings in the basic settings for your appliance. Which settings the display shows will depend on whether Home Connect has been set up and whether the appliance is connected to your home network.

Connecting the appliance to a WLAN home network (Wi-Fi) with WPS function

Using your router's WPS function is the simplest way to connect the appliance to your home network.

Requirement: If your router has a WPS function, you can connect the appliance to your WLAN home network (Wi-Fi) automatically.

1. Press and hold ⊡ for approx. 3 seconds.
✔ The display shows **Aut**.
2. Press ▷II.
3. Press the WPS button on the router within the next 2 minutes.

   Take note of the information in the documents for your router.
✔ ᯤ flashes in the display.
✔ The appliance attempts to connect to your WLAN home network.
✔ If the display shows and ᯤ lights up permanently, the appliance is connected to the home network.

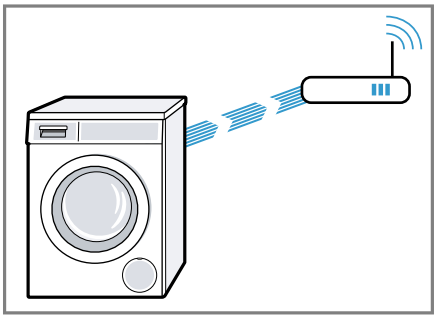

4. If the display shows **Err**, the appliance is not connected to the home network.
   – Check whether your appliance is in range of your home network.
   – Reconnect the appliance to the WLAN home network (Wi-Fi) with WPS function.
5. "Connect your appliance to the Home Connect app." → *Page 45*

Connecting the appliance to a WLAN home network (Wi-Fi) without WPS function

If your router does not have a WPS function, you can connect the appliance to your WLAN home network (Wi-Fi) manually. The appliance quickly sets up its own Wi-Fi network. You can connect a mobile device to the WLAN network and transfer the network information for the WLAN home network (Wi-Fi) to your appliance.

Requirement: The Home Connect app is open and you have logged on.

1. Press and hold ⊡ for at least 3 seconds.
✔ The display shows **Aut**.
2. Set the programme to position 2.
✔ The display shows **SAP**.
3. Press ▷II.
✔ ᯤ flashes in the display.

✔ The appliance now sets up its own Wi-Fi network with the name (SSID) HomeConnect.

4. Call up the Wi-Fi settings on the mobile device.

   Connect the mobile device to the Home Connect Wi-Fi network and enter the password (key) HomeConnect.

✔ Your mobile device now connects to the appliance. The connection process may take up to 60 seconds.

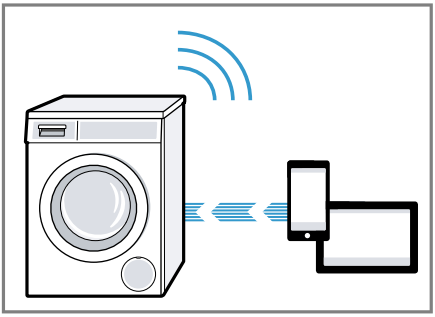

5. Open the Home Connect app on your mobile device and carry out the steps in the app.
6. In the Home Connect app, enter the network name (SSID) and password (key) for your home network.
7. Carry out the steps in the Home Connect app to connect the appliance.

✔ If the display shows and lights up permanently, the appliance is connected to the home network.

8. If the display shows **Err**, the appliance is not connected to the home network.
   - Check whether your appliance is in range of your home network.
   - Reconnect the appliance to the WLAN home network (Wi-Fi) with WPS function.
9. "Connect your appliance to the Home Connect app" → *Page 45*.

Connecting your appliance to the Home Connect app

Requirements

- The appliance is connected to the WLAN home network (Wi-Fi).
- The Home Connect app is open and you have logged on.

1. Set the programme to position 3.

✔ The display shows **APP**.

2. Press ▷II.

✔ The appliance connects to the Home Connect app.

3. Once your appliance is displayed in the Home Connect app, carry out the last steps in the Home Connect app.

✔ If the display shows , the appliance is connected to the Home Connect app.

Connecting the appliance to the energy manager

If you connect the appliance to the smart energy system (energy manager), you will optimise your energy consumption. The appliance starts

only when your home photovoltaic system can provide sufficient energy or the energy tariff is good.

Requirements

- The smart energy system (energy manager) must use the EEBus Initiative communications standard.
- You have read about how to connect your appliance to the smart energy system (energy manager) in the instruction manual for the smart energy system (energy manager).

1. Press and hold ☐ for approx. 3 seconds.
✔ The display shows **Aut**.
2. Set the programme to position 7.
✔ The display shows **EnG**.
3. Press ▷II.
✔ The appliance is connected to the smart energy system (energy manager).
✔ If the appliance has connected to the energy manager successfully, the display shows and ☞ .
4. Activate Flex Start if you want the smart energy system (energy manager) to start up your appliance.
→ *"Activate Flex Start", Page 46*

Activate Flex Start

Activate Flex Start to allow your smart energy system (energy manager) to start your appliance once your home photovoltaic system is able to provide sufficient energy or the energy tariff is good.

Requirement: The smart energy system (energy manager) cannot start your appliance until it is connected to the appliance.

1. Set the programme you require.
2. Press **-** ◷ **+** to set the required time.
3. Press ▷II.
4. Press ▷II.
✔ The display shows ☞ and Flex Start is activated. The appliance waits to be started by the smart energy system (energy manager).
✔ If the time changes on the display, e.g. to 8 h, the smart energy system (energy manager) has established a time at which your appliance can start.
✔ If the smart energy system (energy manager) does not start the appliance within the set time, the appliance will start the programme itself before the set time period ends. The programme ends when the time period ends.

Note

Flex Start is deactivated for safety reasons in the following circumstances:

- Press ▷II.
- Open the door.
- Switch off the appliance.
- Power failure.

Activating Wi-Fi on the appliance

Note: When Wi-Fi is activated, the energy consumption increases in comparison to the values specified in the consumption value table.

1. Press and hold ☐ for approx. 3 seconds.
2. Set the programme to position 4.
✔ The display shows **Con**.
3. Press ▷II repeatedly until the display shows **On**.
✔ Wi-Fi is activated.

Note: If Wi-Fi is activated, the appliance will not switch itself off automatically.

Deactivating Wi-Fi on the appliance

1. Press and hold ⏍ for at least three seconds.
2. Set the programme to position 4.
✔ The display shows **Con**.
3. Press ▷⏸ repeatedly until the display shows **OFF**.
✔ Wi-Fi is deactivated.

Note: If Wi-Fi is switched off and your appliance was previously connected to your home network, this connection will be re-established automatically when Wi-Fi is switched back on.

Software update

Requirement: The display shows **UdP**.

1. Press and hold ⏍ for approx. 3 seconds.
2. Set the programme to position 6.
✔ **UPd** appears on the display.
3. Press ▷⏸.
✔ The software update is installed.
✔ If **End** is shown on the display, the software update is installed.

Note: The software update may take several minutes. Do not switch off the appliance while the software update is in progress.

Resetting the appliance network settings

1. Press and hold ⏍ for at least 3 seconds.
2. Set the programme to position 5.
✔ The display shows **rES**.
3. Press ▷⏸.
✔ The display shows .
4. Press ▷⏸.
✔ The network settings are reset.
✔ If **End** is shown on the display, the network settings are reset.

Tip: If you wish to operate your appliance again via the Home Connect app, you will need to reconnect it to the Wi-Fi and to the Home Connect app.

Remote diagnostics

Customer Service can use Remote Diagnostics to access your appliance if you contact them, have your appliance connected to the Home Connect server and if Remote Diagnostics is available in the country in which you are using the appliance.

Tip: For further information and details about the availability of Remote Diagnostics in your country, please visit the service/support section of your local website: www.home-connect.com

Data protection

Please see the information on data protection.
The first time your appliance is registered on a home network connected to the Internet, your appliance will transmit the following types of data to the Home Connect server (initial registration):

- Unique appliance identification (consisting of appliance codes as well as the MAC address of the Wi-Fi communication module installed).
- Security certificate of the Wi-Fi communication module (to ensure a secure data connection).
- The current software and hardware version of your appliance.
- Status of any previous reset to factory settings.

This initial registration prepares the Home Connect functions for use and is only required when you want to use the Home Connect functions for the first time.

Note: Please note that the Home Connect functions can only be utilised with the Home Connect app. Information on data protection can be retrieved in the Home Connect app.

Declaration of Conformity

BSH Hausgeräte GmbH hereby declares that the appliance with Home Connect functionality meets the essential requirements and other relevant provisions of the Directive 2014/53/EU.
A detailed RED Declaration of Conformity can be found online at www.siemens-home.bsh-group.com among the additional documents on the product page for your appliance.

CE

2.4 GHz band: 100 mW max.
5 GHz band: 100 mW max.

!	BE	BG	CZ	DK	DE	EE	IE	EL
	ES	FR	HR	IT	CY	LV	LT	LU
	HU	MT	NL	AT	PL	PT	RO	SI
	SK	FI	SE	UK	NO	CH	TR	
5 GHz WLAN (Wi-Fi): For indoor use only.								

Basic settings

You can configure the appliance to meet your needs.

Overview of basic settings

Below is an overview of the basic settings on your appliance.

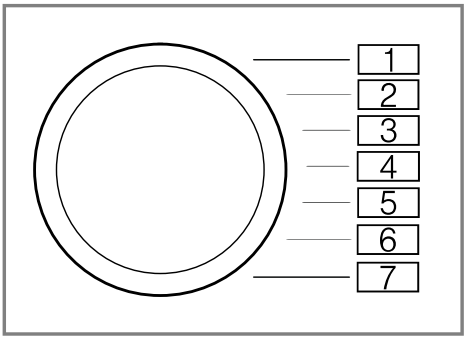

Basic setting	Programme position	Value	Description
End signal	2	0 (off) 1 (quiet) 2 (medium) 3 (loud) 4 (very loud)	Set the volume of the signal at the end of the programme.
Button signal	3	0 (off) 1 (quiet) 2 (medium) 3 (loud) 4 (very loud)	The volume of the audible signal emitted when the buttons are pressed.
Drum cleaning reminder	4	ON OFF	Activate or deactivate the reminder to clean the drum.

Changing the basic settings

1. Set the programme selector to position 1.

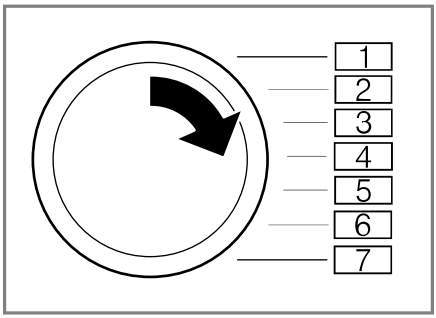

2. Press ⊙ and, at the same time, turn the programme selector to position 2.
✔ The display shows the current value.
3. Set the programme selector to the required position.
4. To change the value, press **-** / **+**.
5. To save the changes, switch off the appliance.

Cleaning and servicing

To keep your appliance working efficiently for a long time, it is important to clean and maintain it carefully.

Tips on appliance care

Follow the tips for appliance care to ensure your appliance works correctly in the long term.

Wipe down the housing and the control panel with nothing but water and a damp cloth.	The appliance parts remain clean and hygienic.
Remove all detergent residue, spray residue or other residues immediately.	Fresh deposits are easier to remove without leaving any residue.
Keep the appliance door and detergent drawer open after use.	This allows the residual water to dry, reducing odours in the appliance.

Cleaning the drum

If you often wash at a washing temperature of 40 °C and lower or the appliance has not been used for a long period, clean the drum.

▸ Run the **Drum Clean** programme without laundry.

Add washing powder.

Cleaning the detergent drawer

If you change detergent or the detergent drawer is dirty, clean the detergent drawer and the pump unit of the intelligent dosing system.

Note: Please read the information in the "Safety" → *Page 4* and "Preventing material damage" → *Page 11* sections to ensure that you use the appliance safely.

1. Switch off the appliance.
2. Pull out the detergent drawer.
3. Press down on the insert and remove the detergent drawer.

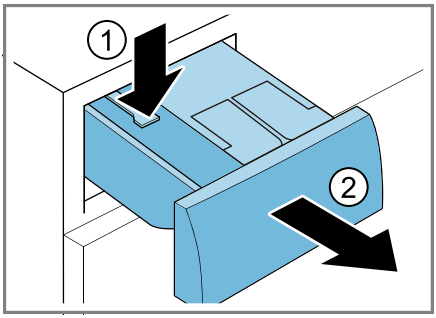

4. Remove the pump unit.

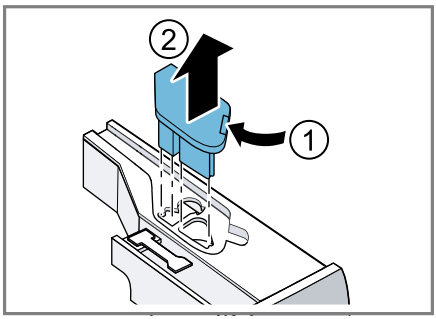

5. Unclip the detergent drawer lid and remove it.

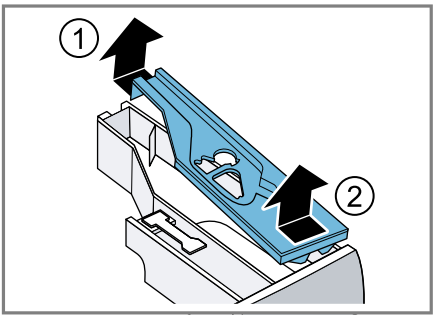

6. Empty the detergent drawer.

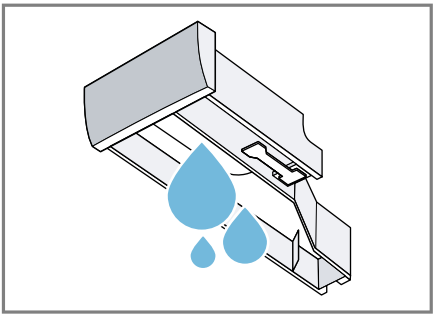

7. **ATTENTION!** The pump unit contains electrical components.
   - Do not clean the pump unit in the dishwasher and do not immerse it in water.
   - Protect the electrical connection on the rear against water, detergent and fabric softener residue.

   Clean the pump unit with a damp cloth.

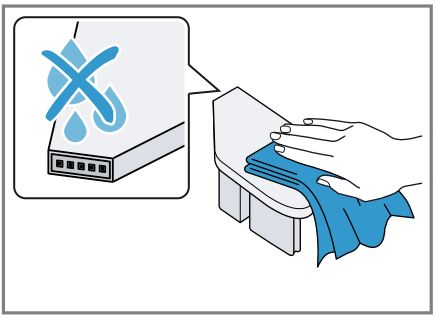

8. Clean the detergent drawer and the lid with a soft, damp cloth or hand shower.

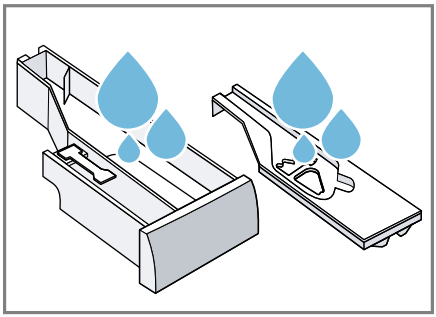

9. Dry the detergent drawer, lid and pump unit and reinsert them.

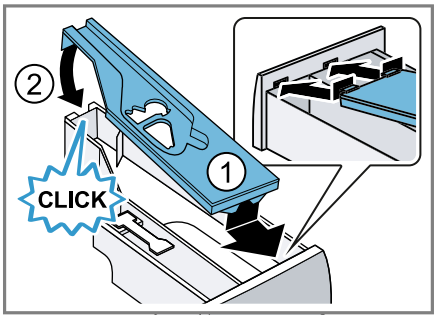

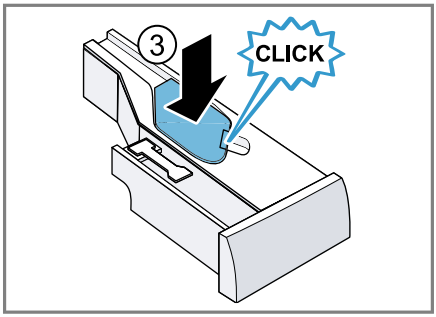

10. Clean the inside of the detergent drawer housing.

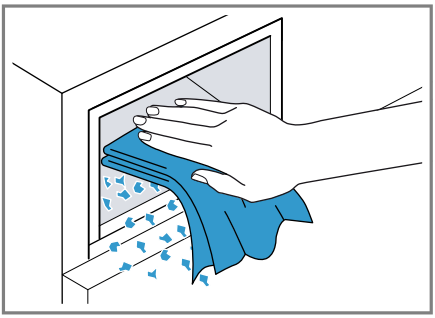

11. Push in the detergent drawer.

Descaling

If you add detergent correctly, you do not need to descale your appliance. If you still wish to use descaler, follow the manufacturer's instructions for use.

ATTENTION!
The use of unsuitable descaling agents, e.g. for coffee machines, may damage the appliance.

- For this appliance, only use descaling agents that are available from the manufacturer's website or our after-sales service.

Cleaning the drain pump

Clean the drain pump in the event of faults, e.g. blockages or rattling noises.

Emptying the drain pump

Note: Please read the information in the "Safety" → *Page 4* and "Preventing material damage" → *Page 11* sections to ensure that you use the appliance safely.

1. Turn off the water tap.
2. Switch off the device.
3. Disconnect the appliance's mains plug from the power supply.
4. Open the maintenance flap.

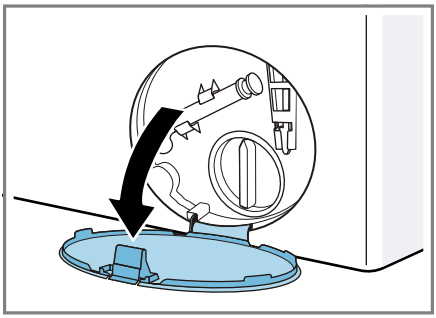

5. Remove the maintenance flap.

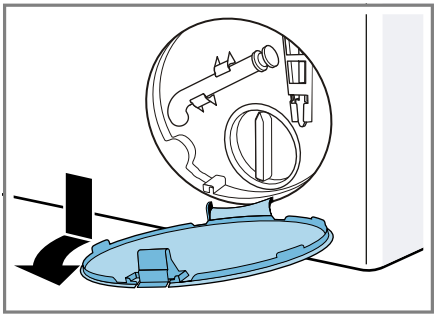

6. Slide a receptacle under the opening.

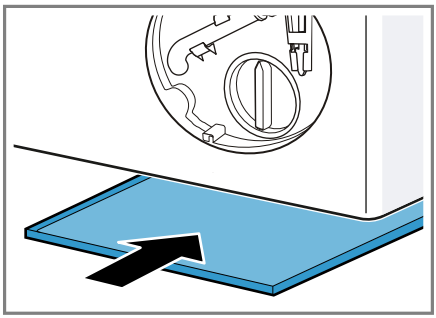

7. Take the drain hose out of the holder.

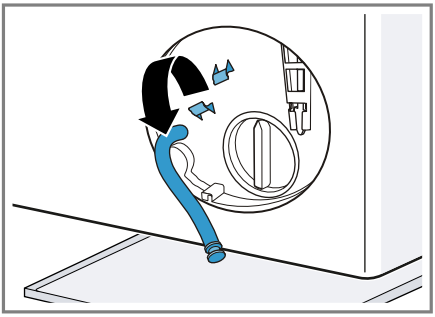

8. ⚠ **CAUTION - Risk of scalding!**
When you wash at high temperatures, the detergent solution gets hot.
- Do not touch the hot detergent solution.

To allow the detergent solution to flow out into the container, remove the sealing cap.

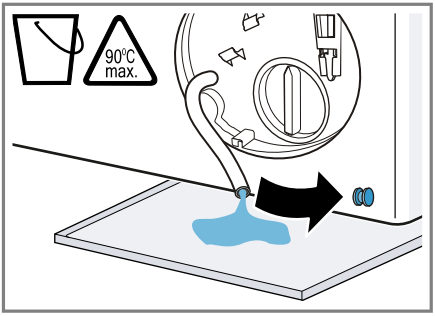

9. Firmly press on the sealing cap.

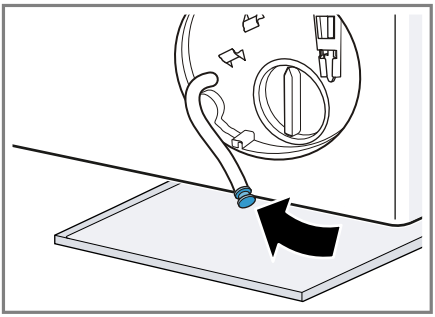

10. Insert the drain hose into the holder.

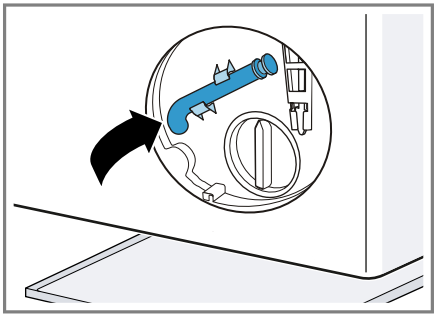

Cleaning the drain pump

Note: Please read the information in the "Safety" → *Page 4* and "Preventing material damage" → *Page 11* sections to ensure that you use the appliance safely.

Requirement: "The drain pump is empty." → *Page 52*

1. Since water may remain in the drain pump, remove the pump cap carefully.
   – The filter insert in the pump housing may become stuck due to coarse particles of dirt. Loosen the dirt and remove the filter insert.

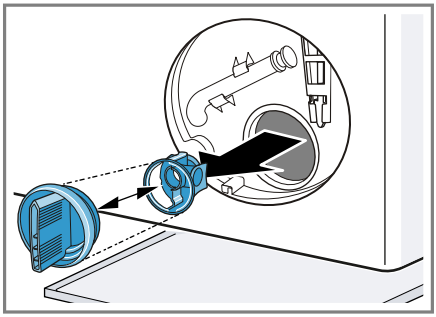

2. Clean the interior, the thread on the pump cap and the pump housing.

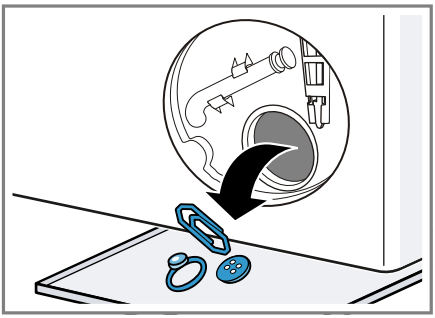

The pump cap is comprised of two parts which can be taken apart for cleaning.

3. Make sure that the impeller in the drain pump can be rotated.
4. Insert the pump cap.
   – Ensure that the parts of the pump cap are correctly assembled.

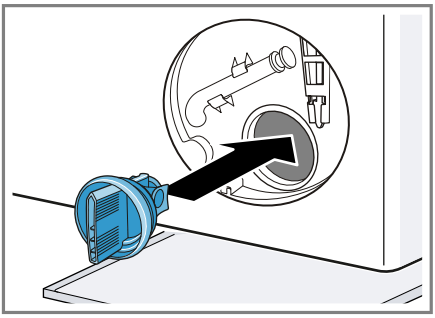

5. Screw on the pump cap.

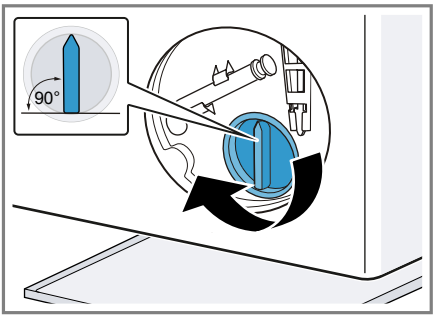

The handle on the pump cap must be in a vertical position.

6. Insert the maintenance flap and lock it into place.

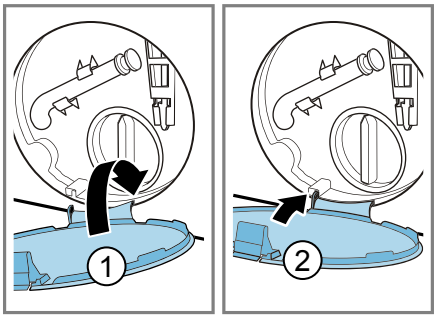

7. Close the maintenance flap.

Before the next wash

To prevent unused detergent from flowing straight into the outlet in the next wash, run the programme after you have emptied the drain pump.

1. Turn on the tap.
2. Insert the mains plug.
3. Switch on the appliance.
4. Pour 1 litre of water into the manual dosing compartment.
5. Start the programme.

Cleaning the water outlet hose at the siphon

If the water outlet hose at the siphon is dirty or the detergent solution is not being pumped out, you must clean these.

1. Switch off the appliance.
2. Disconnect the appliance's mains plug from the power supply.
3. Loosen the hose clamp and carefully remove the water outlet hose.

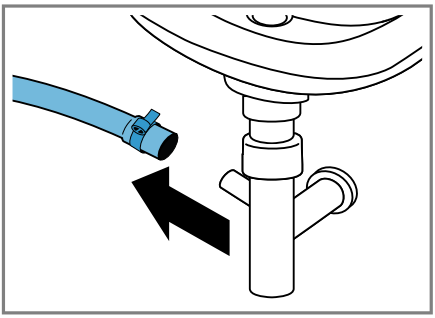

Residual water may leak out.

4. Clean the water outlet hose and siphon connecting piece.

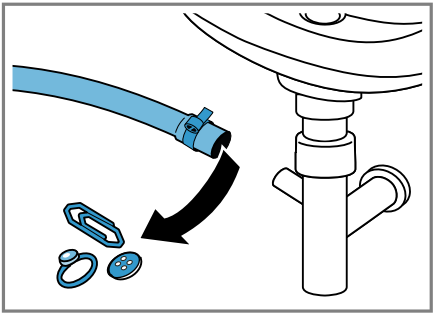

5. Reattach the water outlet hose and secure the connection point using the hose clamp.

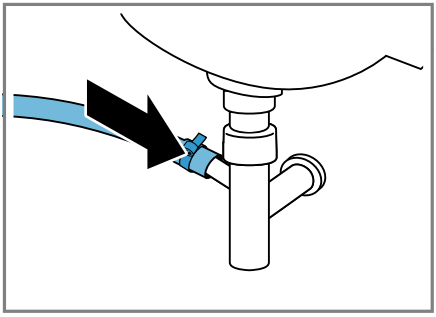

Cleaning the water inlet filter

Clean the filter in the water inlet in the event of blockages or if the water pressure is too low.

Emptying the water inlet hose

In order to clean the filter, first empty the water inlet hose.

1. Turn off the tap.
2. Set the **Cotton** programme.
3. Start the programme and leave it to run for approx. 70 seconds.
4. Switch off the appliance.
5. Disconnect the appliance's mains plug from the power supply.

Cleaning the filter on the tap

Note: Please read the information in the "Safety" → *Page 4* and "Preventing material damage" → *Page 11* sections to ensure that you use the appliance safely.

Requirement: The water inlet hose is empty.

1. Remove the water inlet hose from the tap.

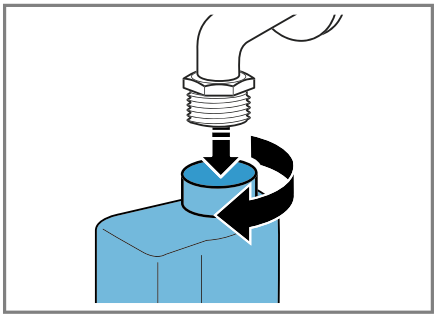

2. Clean the filter with a small brush.

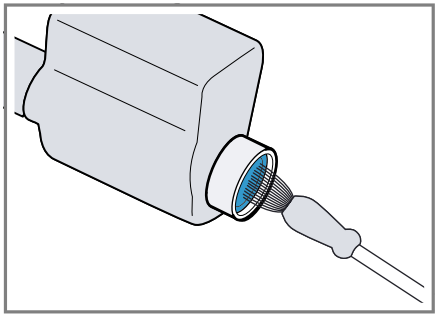

3. Connect the water inlet hose and check for leaks.

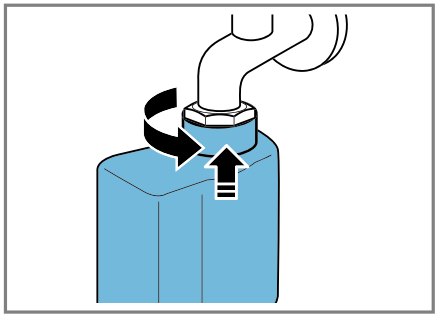

Troubleshooting

You can rectify minor faults on your appliance yourself. Read the troubleshooting information before contacting after-sales service. This will avoid unnecessary costs.

⚠ **WARNING**
Risk of electric shock!
Improper repairs are dangerous.
- Repairs to the appliance should only be carried out by trained specialist staff.
- Only use genuine spare parts when repairing the appliance.
- If the power cord of this appliance is damaged, it must be replaced by the manufacturer, the manufacturer's Customer Service or a similarly qualified person in order to prevent any risk.

Error code / Fault display / Signal

Fault	Cause	troubleshooting
The display goes out and ▷▯▯ flashes.	Energy-saving mode is active	▶ Press any button. ✔ The symbol lights up again.
"E:30 / -80"	Drain pipe or water outlet hose is blocked.	▶ Clean the drain pipe and the water outlet hose.
	Drain pipe or water drain hose is caught or jammed.	▶ Ensure that the drain pipe and water drain hose are not kinked or trapped.
	Drain pump is blocked.	▶ → *"Cleaning the drain pump", Page 52*
	The water outlet hose is connected too high.	▶ Install the water outlet hose at a maximum height of 1 metre. → *"Technical specifications", Page 71*
	Pump cover is not correctly assembled.	▶ Correctly assemble the pump cover.
"E:36 / -25 / -26"	Drain pump is blocked.	▶ → *"Cleaning the drain pump", Page 52*

Fault	Cause	troubleshooting
"E:10 / -00 / -10 / -20"	The pump for the intelligent dosing system is blocked.	1. Switch off the appliance. 2. Clean the pump unit. → *"Cleaning the detergent drawer", Page 50* 3. If this indicator appears again, call our after-sales service. → *"Customer Service", Page 68* **Note:** You can start the washing programme if you deactivate the intelligent dosing system and dose manually. → *"Buttons", Page 25*
"E:60 / -2B"	The unbalanced load detection system has interrupted the spin cycle because the laundry is unevenly distributed.	▶ Redistribute the laundry in the drum. **Note:** Where possible, mix large and small items in the drum. Different sized items of laundry distribute themselves better during the spin cycle.
	The water pressure is low.	No remedial action possible.
	The filter in the water inflow is blocked.	▶ "Clean the water inflow filter" → *Page 55*.
	The tap is turned off.	▶ Turn on the tap.
	The water inlet hose is kinked or jammed.	▶ Ensure that the water inlet hose is not kinked or jammed.
"E:35 / -10"	There is water in the base trough.	▶ Turn off the water tap. ▶ Call the after-sales service. → *"Customer Service", Page 68*
	The appliance is leaking.	▶ Turn off the water tap. ▶ Call the after-sales service. → *"Customer Service", Page 68*
	The detergent drawer has not been pushed in as far as it can go.	▶ Push the detergent drawer in as far as it will go.
	The pump unit is not inserted.	1. Insert the pump unit into the detergent drawer. → *"Cleaning the detergent drawer", Page 50* 2. Push the detergent drawer in as far as it will go.

Fault	Cause	troubleshooting
	Detergent dosage is too high.	▶ Immediate measure: Mix one tablespoon of fabric softener with 0.5 litres of water and pour the mixture into the compartment for manual dosing (not for outdoor clothing, sportswear or items stuffed with down). ▶ If intelligent dosing is activated, reduce the "basic dosage" → *Page 43*. ▶ If you dose manually, reduce the amount of detergent for the next washing cycle with the same load.
All other error codes.	Malfunction	▶ Call the after-sales service. → *"Customer Service", Page 68*

Malfunctions

Fault	Cause	troubleshooting
The appliance is not working.	The mains plug of the power cord is not plugged in.	▶ Connect the appliance to the power supply.
	The circuit breaker is faulty.	▶ Check the circuit breaker in the fuse box.
	There has been a power cut.	▶ Check whether the lighting in your kitchen or other appliances are working.
The programme does not start.	You have not pressed ▷II.	▶ Press ▷II.
	Door is not closed.	1. Close the door. 2. Press ▷II to start the programme.
	Childproof lock is activated.	▶ → *"Deactivating the childproof lock", Page 42*
	- ◷ **+** is activated.	▶ Check whether **-** ◷ **+** is activated. → *"Buttons", Page 25*
	Laundry is caught in the door.	1. Open the door again. 2. Remove any trapped laundry. 3. Close the door. 4. Press ▷II to start the programme.
	The detergent drawer has not been pushed in as far as it can go.	▶ Push the detergent drawer in as far as it will go.

Fault	Cause	troubleshooting
The programme does not start.	The pump for the intelligent dosing system is blocked.	1. Switch off the appliance. 2. Clean the pump unit. → *"Cleaning the detergent drawer", Page 50* 3. If this indicator appears again, call our after-sales service. → *"Customer Service", Page 68* **Note:** You can start the washing programme if you deactivate the intelligent dosing system and dose manually. → *"Buttons", Page 25*
The door cannot be opened.	is activated.	▶ Continue the programme by selecting or and pressing ▷II. → *"Resuming the programme when the programme status is Rinse Hold", Page 41*
	The temperature is too high.	▶ Wait until the temperature has dropped. ▶ → *"Cancelling the programme", Page 40*
	Water level is too high.	▶ Start the programme.
	Power failure.	▶ Open the door using the emergency release. → *"Emergency release", Page 66*
The water is not draining.	Drain pipe or water outlet hose is blocked.	▶ Clean the drain pipe and the water outlet hose.
	Drain pipe or water drain hose is caught or jammed.	▶ Ensure that the drain pipe and water drain hose are not kinked or trapped.
	Drain pump is blocked.	▶ → *"Cleaning the drain pump", Page 52*
	is activated.	▶ Continue the programme by selecting or and pressing ▷II. → *"Resuming the programme when the programme status is Rinse Hold", Page 41*
	The water outlet hose is connected too high.	▶ Install the water outlet hose at a maximum height of 1 metre. → *"Technical specifications", Page 71*

Fault	Cause	troubleshooting
The water is not draining.	Pump cover is not correctly assembled.	▶ Correctly assemble the pump cover.
	Pump cover is not correctly assembled.	▶ Correctly assemble the pump cover.
Water is not flowing in. Detergent is not being dispensed.	You have not pressed ▷II.	▶ Press ▷II.
	The filter in the water inflow is blocked.	▶ "Clean the water inflow filter" → *Page 55*.
	The tap is turned off.	▶ Turn on the tap.
	The water inlet hose is kinked or jammed.	▶ Ensure that the water inlet hose is not kinked or jammed.
The spin cycle runs several times.	The unbalanced load detection system eliminates an imbalance by repeatedly redistributing the laundry.	▶ Not a fault – no action required. **Note:** When loading, where possible, place large and small items of laundry together in the drum. Different sized items of laundry distribute themselves better during the spin cycle.
The programme duration changes during the wash cycle.	The programme operation is optimised electronically. This may change the programme duration.	▶ Not a fault – no action required.
	The unbalanced load detection system eliminates an imbalance by repeatedly redistributing the laundry.	▶ Not a fault – no action required. **Note:** When loading, where possible, place large and small items of laundry together in the drum. Different sized items of laundry distribute themselves better during the spin cycle.
	Foam detection system switches on a rinse cycle if foam build-up is too high.	▶ Not a fault – no action required.
No water is visible in the drum.	Water is below the visible area.	▶ Not a fault – no action required.
Drum jerks after the programme starts.	This is caused by an internal motor test.	▶ Not a fault – no action required.
Vibrations and movement of the appliance whilst spinning.	Appliance is not correctly aligned.	▶ Aligning the appliance
	The appliance feet are not fixed.	▶ Secure the appliance feet. Aligning the appliance
	Transit bolts have not been removed.	▶ Removing the transit bolts

Fault	Cause	troubleshooting
Drum does not turn, water does not flow in.	Load detection is active.	▶ Not a fault – no action required. **Note:** The load detection can take up to two minutes.
Heavy foam build-up	Detergent dosage is too high.	▶ Immediate measure: Mix one tablespoon of fabric softener with 0.5 litres of water and pour the mixture into the compartment for manual dosing (not for outdoor clothing, sportswear or items stuffed with down). ▶ If intelligent dosing is activated, reduce the "basic dosage" → *Page 43*. ▶ If you dose manually, reduce the amount of detergent for the next washing cycle with the same load.
1, 2 cannot be actuated.	Intelligent dosing is not intended for this programme.	▶ Not a fault – no action required.
	Programme progress does not allow intelligent dosing.	No remedial action possible.

Noise

Fault	Cause	troubleshooting
Rushing, hissing noise.	Water is flushed under pressure into the detergent drawer.	▶ Not a fault – normal operating noise.
Longer, whirring noise before the start of the wash cycle or fabric softening.	Intelligent dosing system dispenses detergent or care products.	▶ Not a fault – normal operating noise.
Brief whirring noise after switching on the appliance.	Intelligent dosing system carries out a function test.	▶ Not a fault – normal operating noise.
Loud noises during the spin cycle.	Appliance is not correctly aligned.	▶ Aligning the appliance
	The appliance feet are not fixed.	▶ Secure the appliance feet. Aligning the appliance
	Transit bolts have not been removed.	▶ Removing the transit bolts
Banging noises, rattling in the drain pump.	Foreign bodies have got into the drain pump.	▶ → *"Cleaning the drain pump", Page 52*

Fault	Cause	troubleshooting
Slurping, rhythmical suction noise.	The drain pump is active, the detergent solution is pumped out.	▶ Not a fault – normal operating noise.

Problem with results

Fault	Cause	troubleshooting
Creasing.	The spin speed is too high.	▶ The next time you run a wash cycle, set a lower spin speed.
	The load is too large.	▶ The next time you run a wash cycle, reduce the amount of laundry being loaded.
	The wrong programme is selected for the type of fabric.	▶ Select the programmes that are suitable for the type of fabric. → *"Programmes", Page 28*
The spin result is not satisfactory. The laundry is too wet/too damp.	A low spin speed is selected.	▶ The next time you run a wash cycle, set a higher spin speed. ▶ Start the programme.
	is activated.	▶ Select the programmes that are suitable for the type of fabric. → *"Programmes", Page 28*
	The unbalanced load detection system has interrupted the spin cycle because the laundry is unevenly distributed.	▶ Redistribute the laundry in the drum. **Note:** Where possible, mix large and small items in the drum. Different sized items of laundry distribute themselves better during the spin cycle. ▶ Start the programme.
Detergent residue on the damp washing.	Detergents may contain water-insoluble substances that deposit on the laundry.	▶ Start the **Rinse** programme.
	Unsuitable detergent added to the dispenser of the intelligent dosing system.	1. Check whether the detergent used is suitable. → *"Detergents and care products", Page 37* 2. Drain the dispenser. → *"Cleaning the detergent drawer", Page 50* 3. Clean the dispenser. 4. Refill the dispenser. → *"Filling the dispenser", Page 42*

Fault	Cause	troubleshooting
Detergent residue on the damp washing.	Basic dosage is not correctly adjusted.	▶ If intelligent dosing is activated, reduce the "basic dosage" → *Page 43*.
Detergent residue on the dry laundry.	Detergents may contain water-insoluble substances that deposit on the laundry.	▶ Brush out the laundry after washing and drying.
	Unsuitable detergent added to the dispenser of the intelligent dosing system.	**1.** Check whether the detergent used is suitable. → *"Detergents and care products", Page 37* **2.** Drain the dispenser. → *"Cleaning the detergent drawer", Page 50* **3.** Clean the dispenser. **4.** Refill the dispenser. → *"Filling the dispenser", Page 42*
	Basic dosage is not correctly adjusted.	▶ If intelligent dosing is activated, reduce the "basic dosage" → *Page 43*.
Insufficient cleaning.	Basic dosage is not correctly adjusted.	▶ If intelligent dosing is activated, adjust the "basic dosage" → *Page 43* correctly.
	Detergent or care products have congealed in dispensers of the intelligent dosing system.	**1.** Check whether the detergent used is suitable. → *"Detergents and care products", Page 37* **2.** Drain the dispenser. → *"Cleaning the detergent drawer", Page 50* **3.** Clean the dispenser. **4.** Refill the dispenser. → *"Filling the dispenser", Page 42*
	Unsuitable detergent added to the dispenser of the intelligent dosing system.	**1.** Check whether the detergent used is suitable. → *"Detergents and care products", Page 37* **2.** Drain the dispenser. → *"Cleaning the detergent drawer", Page 50* **3.** Clean the dispenser. **4.** Refill the dispenser. → *"Filling the dispenser", Page 42*

Home Connect problem

Fault	Cause	troubleshooting
HomeConnect is not working correctly.	Different causes are possible.	▶ Go to www.home-connect.com.
No connection to the home network.	Wi-Fi is switched off.	▶ → *"Activating Wi-Fi on the appliance", Page 46*
	Wi-Fi is activated but a connection to your home network cannot be established.	**1.** Ensure that the home network is available. **2.** Reconnect the appliance to the home network. → *"Connecting the appliance to a WLAN home network (Wi-Fi) with WPS function", Page 44* → *"Connecting the appliance to a WLAN home network (Wi-Fi) without WPS function", Page 44*

Leakage

Fault	Cause	troubleshooting
Water is leaking out at the water inlet hose.	Water inlet hose is not correctly/securely connected.	**1.** Connect the water supply hose correctly. Connecting the water inlet hose **2.** Tighten the screw connection.
Water is leaking out at the water outlet hose.	The water outlet hose is damaged.	▶ Replace the damaged water outlet hose.
	Water outlet hose is not connected correctly.	▶ Connect the water outlet hose correctly. Water outlet connection types

Odours

Fault	Cause	troubleshooting
Odours have formed in the appliance.	Humidity and detergent residue may promote the formation of bacteria.	▶ → *"Cleaning the drum", Page 50* ▶ If you are not using the appliance, leave the door and detergent drawer open so that residual water can evaporate.

Emergency release

To remove the laundry in the event of a power failure, for example, you can manually release the door.

Releasing the door

Requirement: "The drain pump is empty." → *Page 52*

1. **ATTENTION!** Escaping water may cause material damage.
   ▸ Do not open the door if you can see water through the glass.

   Pull the emergency release downwards with a tool and release.

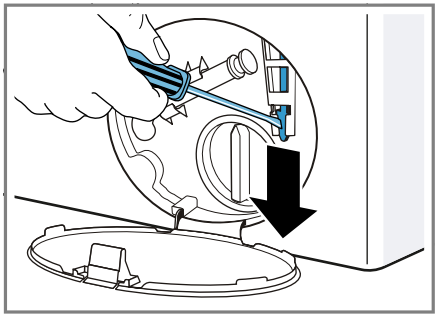

✔ The door lock is released.

2. Insert the maintenance flap and lock it into place.
3. Close the maintenance flap.

Transportation, storage and disposal

You can find out here how to prepare your appliance for transportation and storage. You will also find out how to dispose of old appliances.

Removing the appliance

1. Turn off the tap.
2. → *"Emptying the water inlet hose", Page 55*.
3. Switch off the appliance.
4. Unplug the appliance's mains plug.
5. Drain the remaining detergent solution.
   → *"Cleaning the drain pump", Page 52*
6. Detach the hoses.
7. Empty the dispensers.

Inserting the transit bolts

Secure the appliance for transportation using transit bolts in order to prevent damage.

1. Remove the four cover caps.
   – If necessary, use a screwdriver to remove the cover caps.

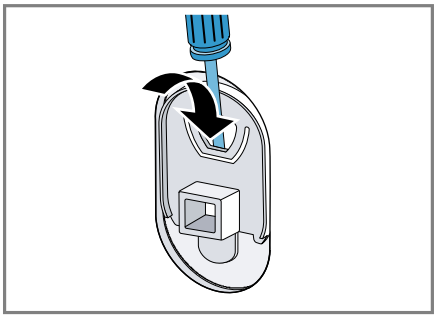

   Keep the cover caps.
2. Insert the four sleeves.

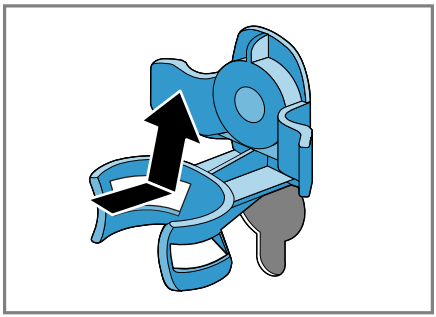

3. Insert all screws into the four transit bolts and tighten slightly.

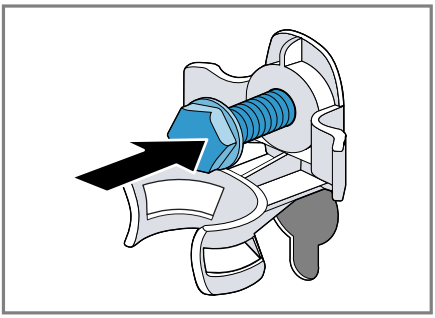

4. Insert the power cord into the holder ① and tighten all four screws for the transit bolts with a WAF 13 wrench ②.

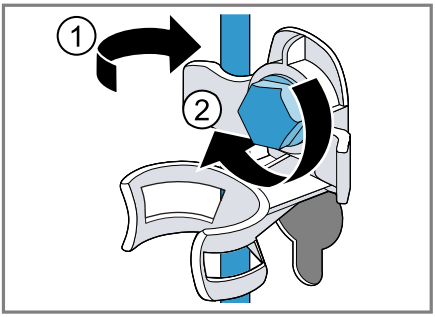

5. Insert the hose into holder.

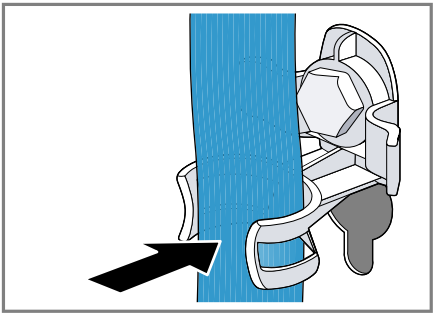

Using the appliance again

1. Remove the transit bolts.
2. Pour approx. 1 litre of water into the manual dosing compartment in the detergent drawer.
3. Start the programme.

✔ The unused detergent cannot flow straight into the outlet during the next wash.

Disposing of old appliance

Valuable raw materials can be re-used by recycling.

⚠ **WARNING**
Risk of harm to health!
Children can lock themselves in the appliance, thereby putting their lives at risk.

- ▸ Do not install the appliance behind a door as this may obstruct the appliance door or prevent it from opening.
- ▸ With redundant appliances, unplug the power cord. Then cut through the cord and damage the lock on the appliance door beyond repair so that the appliance door will no longer close.

1. Unplug the appliance from the mains.
2. Cut through the power cord.
3. Dispose of the appliance in an environmentally friendly manner.

This appliance is labelled in accordance with European Directive 2012/19/EU concerning used electrical and electronic appliances (waste electrical and electronic equipment - WEEE). The guideline determines the framework for the return and recycling of used appliances as applicable throughout the EU.

Customer Service

If you have any queries on use, are unable to rectify faults on the appliance yourself or if your appliance needs to be repaired, contact Customer Service.
You can solve many problems yourself by consulting the information on troubleshooting in these instructions or on our website. If this is not the case, contact our after-sales service. We will always find an appropriate solution and try to avoid unnecessary visits being made by a Customer Service technician.
With any warranty claims, we will make sure that your appliance is repaired by trained after-sales technicians using genuine spare parts, including after the manufacturer's warranty has expired.
For safety reasons repairs to the appliance should only be carried out by trained specialist staff. The warranty claim becomes void if repairs or interventions have been carried out by persons not authorised by us for that purpose or if our appliances have been fitted with spare, supplementary or accessory parts that were not genuine parts and then resulted in a defect.
Function-relevant genuine spare parts according to the corresponding Ecodesign Order can be obtained from Customer Service for a period of at least 10 years from the date on which your appliance was placed on the market within the European Economic Area.

Note: Under the terms of the manufacturer's warranty the use of Customer Service is free of charge.

Detailed information on the warranty period and terms of warranty in your country is available from our after-sales service, your retailer or on our website.
If you contact Customer Service, you will require the product number (E-Nr.) and the production number (FD) of your appliance.
The contact details for Customer Service can be found in the enclosed Customer Service directory or on our website.

Product number (E-Nr.) and production number (FD)

You can find the product number (E-Nr.) and the production number (FD) on the appliance's rating plate.
Depending on the model, the rating plate is located:

- On the inside of the door.
- On the inside of the maintenance flap.
- On the rear of the appliance.

Make a note of your appliance's details and the Customer Service telephone number to find them again quickly.

AQUA-STOP guarantee

In addition to warranty claims against the seller under the purchase agreement and in addition to our manufacturer's warranty, we offer compensation under the following conditions.

- If our Aqua-Stop system is defective and causes water damage, we will make good the damage for private users. To ensure protection from water damage, the appliance must be connected to the power supply.
- The liability guarantee is valid for the service life of the appliance.

- A claim can only be made under the guarantee if the appliance has been correctly installed and connected with Aqua-Stop according to our instructions; this also includes correctly fitting the Aqua-Stop extension (genuine accessory). Our guarantee does not cover defective supply lines or fittings up to the Aqua-Stop connection on the tap.
- If your appliance is fitted with Aqua-Stop, you can in principle leave your appliance unattended during operation and the tap turned on afterwards. The tap only needs to be turned off if you are away from home for a long period, e.g. on holiday for several weeks.

Consumption values

The following information is provided in accordance with the EU Ecodesign Regulation. The values given for programs other than the **Eco 40-60** are indicative only and were determined in accordance with the applicable standard EN60456. The automatic dosing function has been deactivated for this purpose.
Note on the comparison test: Deactivate the automatic dosing function unless this function is the object of the test.

Programme	Load (kg)	Programme duration (hr:min)[1]	Energy consumption (kWh/cycle)[1]	Water consumption (l/cycle)[1]	Maximum temperature (°C) 5 mins[1]	Spin speed (rpm)[1]	Residual moisture (%)[1]
Eco 40-60[2]	10,0	3:55	1,200	70,0	40	1600	44
Eco 40-60[2]	5,0	2:55	0,650	48,0	33	1600	44
Eco 40-60[2]	2,5	2:45	0,330	36,0	25	1600	44
Cotton 20 °C	10,0	3:15	0,500	95,0	24	1600	46
Cotton 40 °C	10,0	3:36	1,400	95,0	42	1600	46
Cotton 60 °C	10,0	3:32	2,150	95,0	60	1600	46
Cotton 40 °C +	10,0	4:14	1,450	105,0	42	1600	46
Easy Care 40 °C	4,0	2:29	0,780	58,0	43	1200	30
Mix 40 °C	4,0	1:00	0,650	44,0	41	1600	52
Wool 30 °C	2,0	0:41	0,200	40,0	25	800	25

[1] Due to the influence of water pressure, hardness and inlet temperature, ambient temperature, type, amount and soiling of laundry, detergent used, fluctuations in the power supply and the selected additional functions, the actual values may deviate from the stated values.
[2] Test programme in accordance with the EU Ecodesign Directive and the EU Energy Labelling Regulation with cold water (15 °C).

Technical specifications

Facts and figures for your appliance can be found here.

Appliance height	85,0 cm
Appliance width	60,0 cm
Appliance depth	64,0 cm

[1] Depending on the appliance specifications

Weight	73 kg[1]
Maximum load capacity	10 kg
Mains voltage	220 - 240 V, 50 Hz
Minimum installation protection	10 A
Rated power	2300 W

[1] Depending on the appliance specifications

Power consumption	■ Off mode: 0,10 W ■ Left-on mode: 0,50 W ■ Time in networked standby mode (Wi-Fi): 5 min(s) ■ Networked standby mode (Wi-Fi): 1,50 W
Water pressure	■ Minimum: 100 kPa (1 bar) ■ Maximum: 1000 kPa (10 bar)
Length of the water inlet hose	150 cm
Length of the water outlet hose	150 cm
Length of the power cord	210 cm
Max. draining height	100 cm

[1] Depending on the appliance specifications

This product contains light sources from energy efficiency class F. These light sources are available as a spare part and must only be replaced by trained specialist staff.
More information about your model can be found online at https://energylabel.bsh-group.com[1]. This web address is linked to the official EU EPREL product database. At the time of printing its web address had not yet been published. Please then follow the instructions on searching for models. The model identifier is made up of the characters before the slash in the product number (E-Nr.) on the rating plate. Alternatively you can also find the model identifier in the first line of the EU energy label.

[1] Only applies to countries in the European Economic Area

BSH Hausgeräte GmbH
Carl-Wery-Straße 34
81739 München
GERMANY
www.siemens-home.bsh-group.com

Manufactured by BSH Hausgeräte GmbH under Trademark License of Siemens AG

9001433466 (000428)
en