PHILIPS

hue personal wireless lighting

Fugato

Hue serial number

User manual
Benutzerhandbuch
Notice d’emploi
Manual de usuario
Manual do usuário
Manuale d’uso

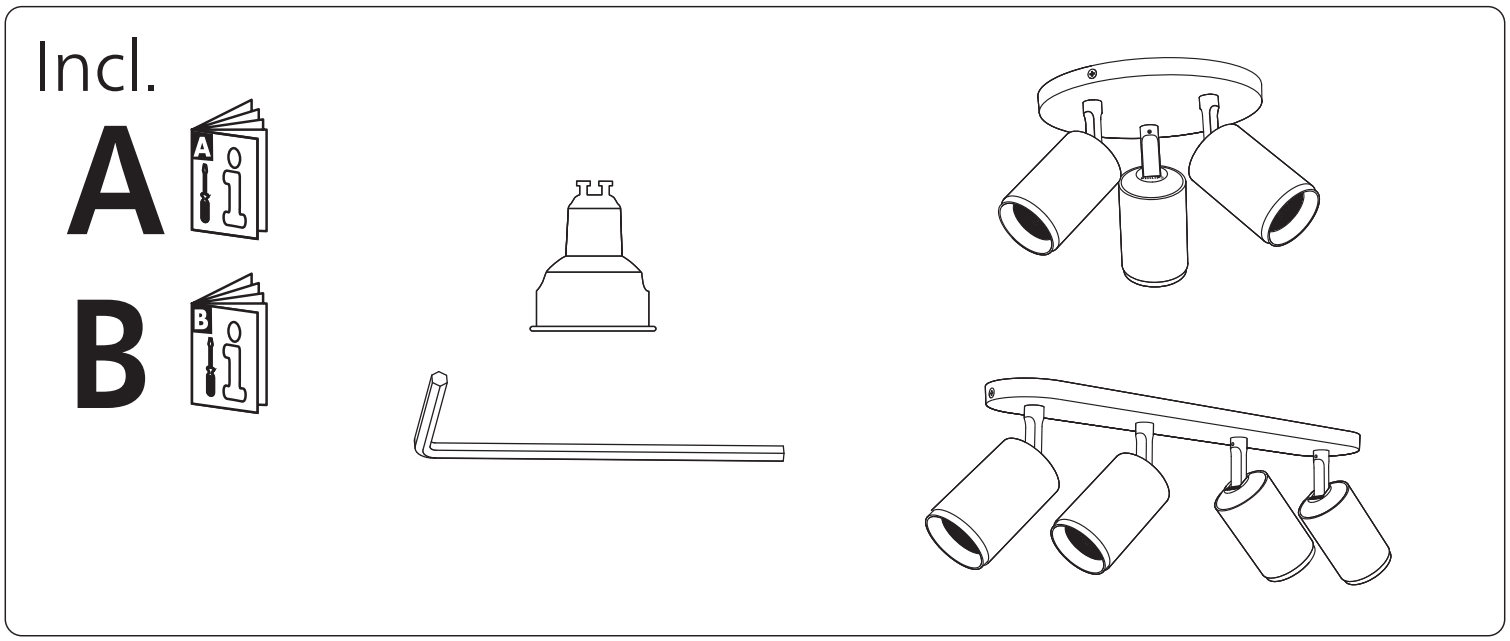
Incl.
A
B

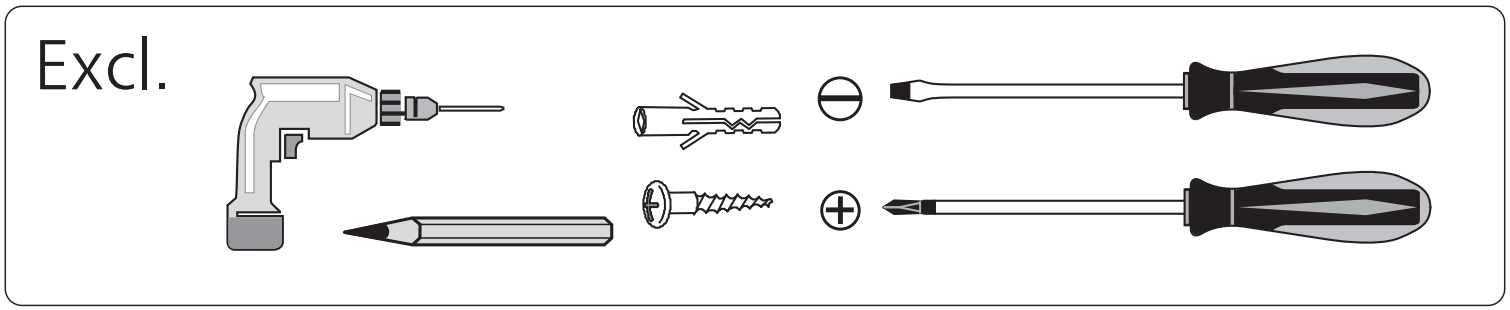
Excl.

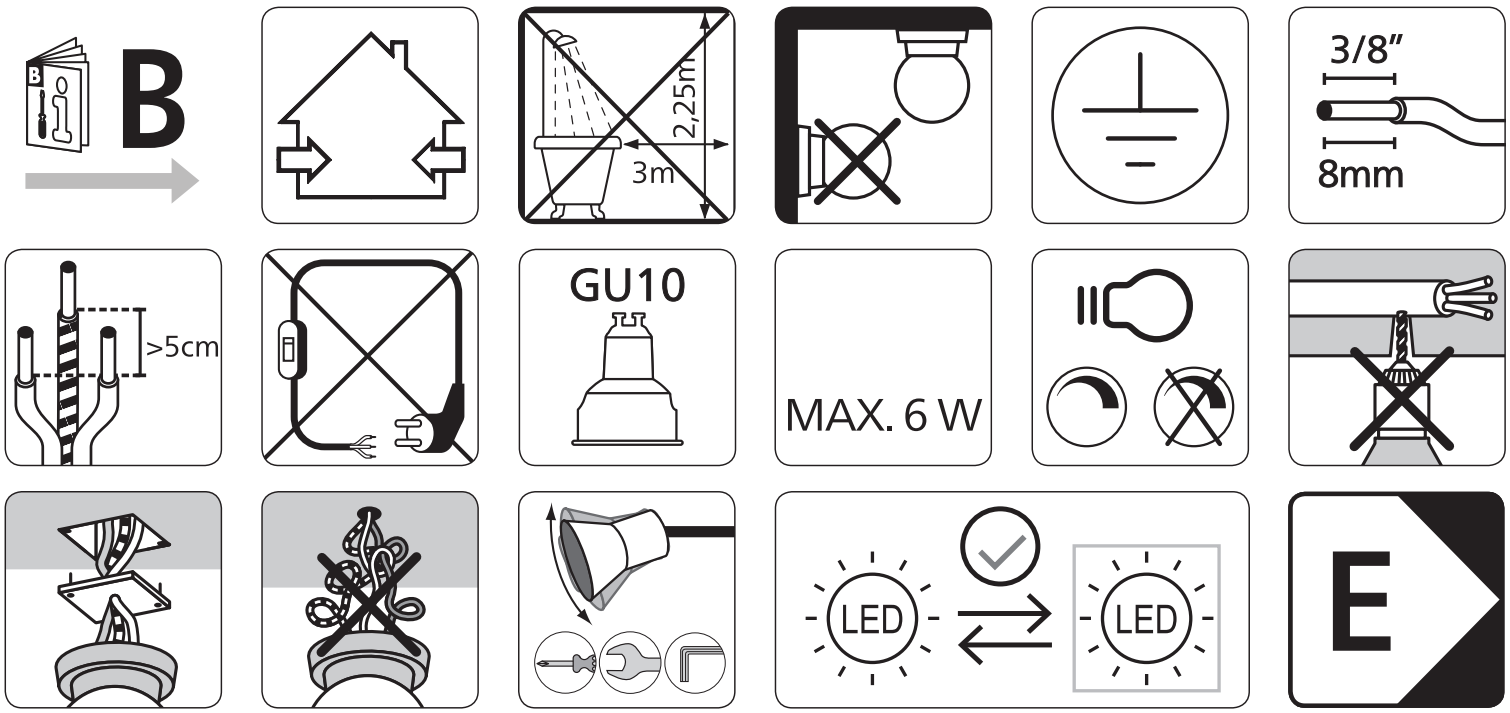
B
2,25m
3m
3/8"
8mm
>5cm
GU10
MAX. 6 W
LED
LED
E

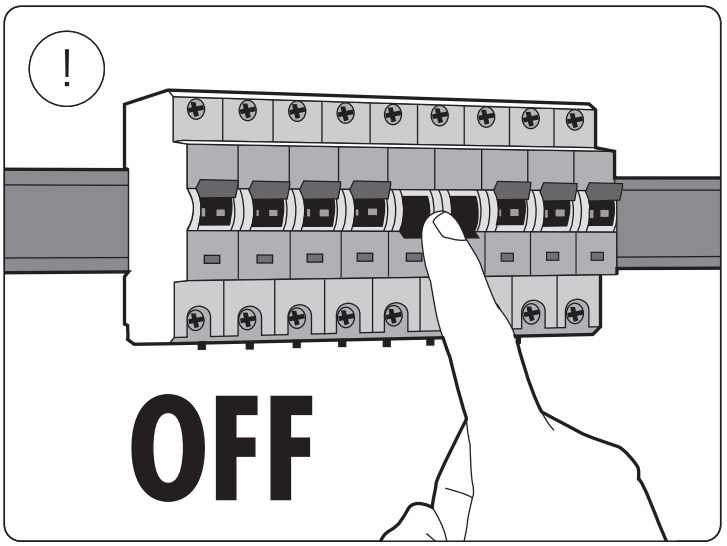
!
OFF

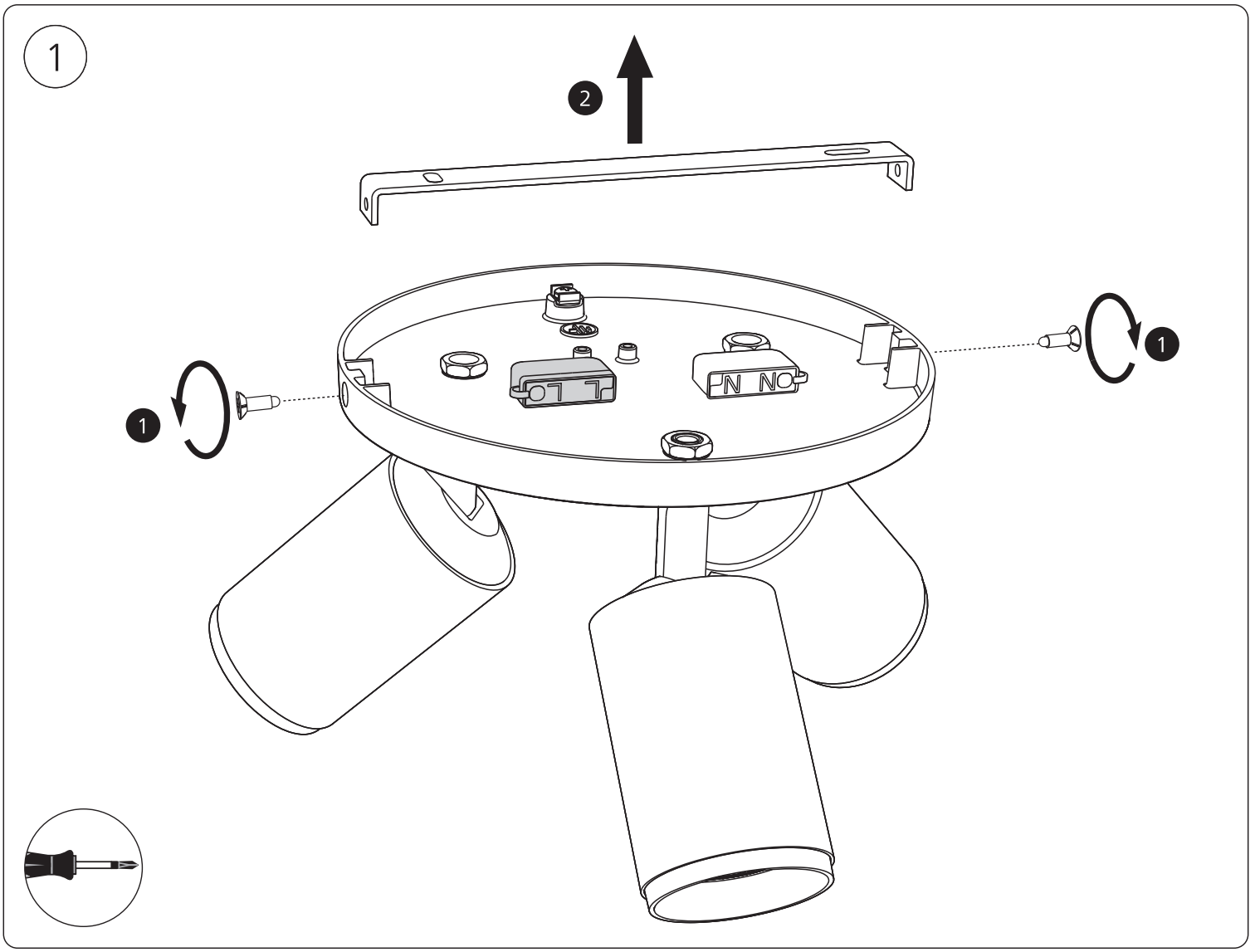
1
2
1
1
L
N

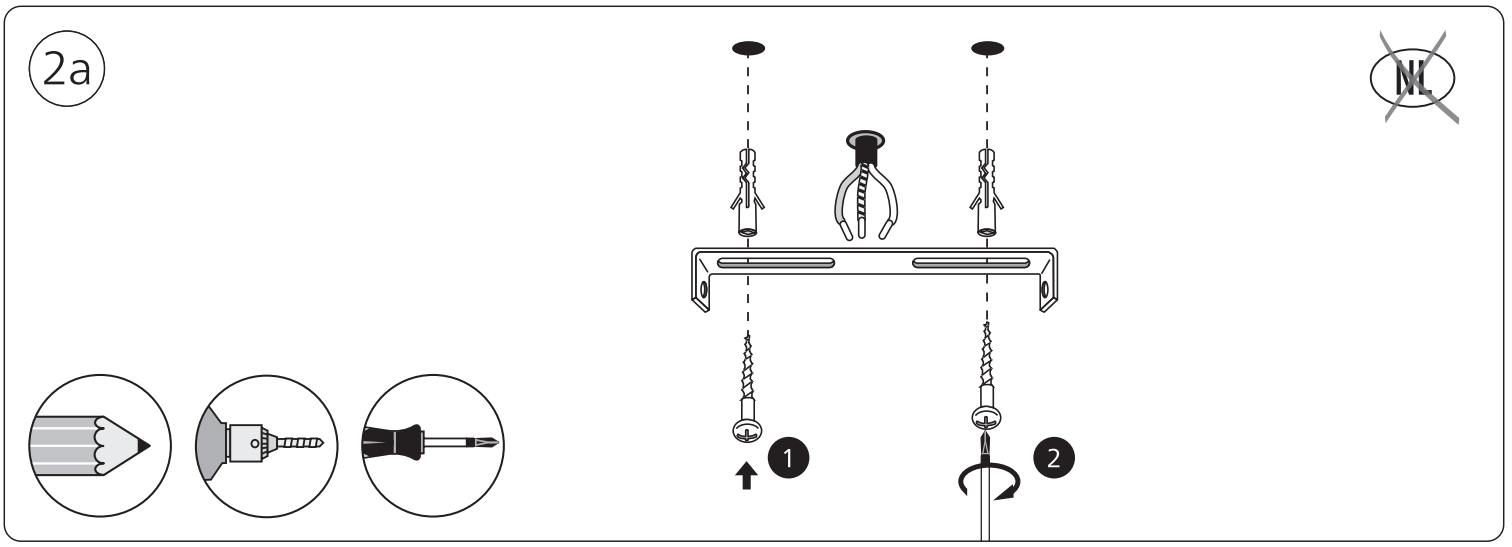
2a
NL
1
2

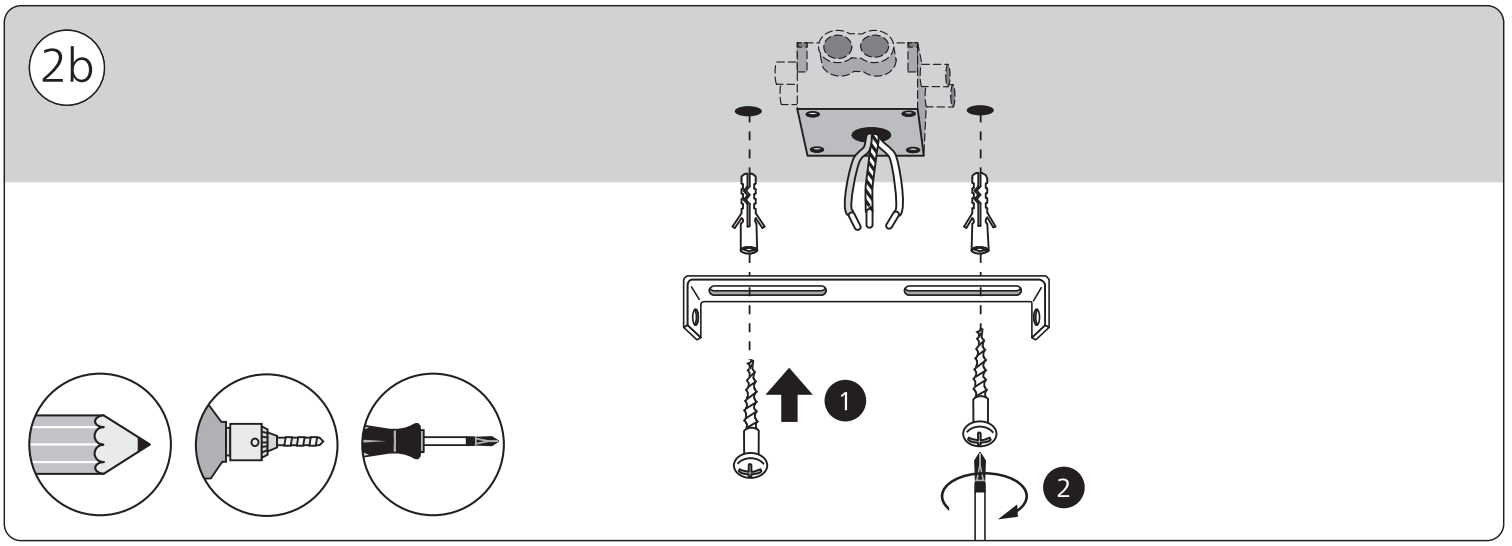
2b
1
2

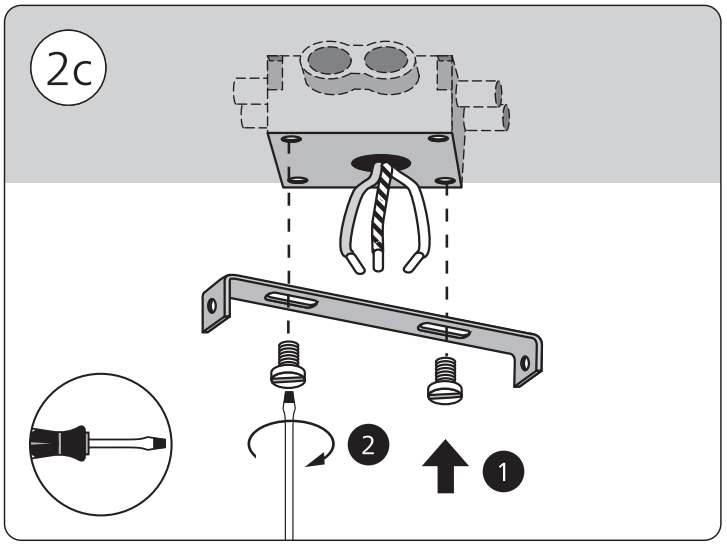
2c
2
1

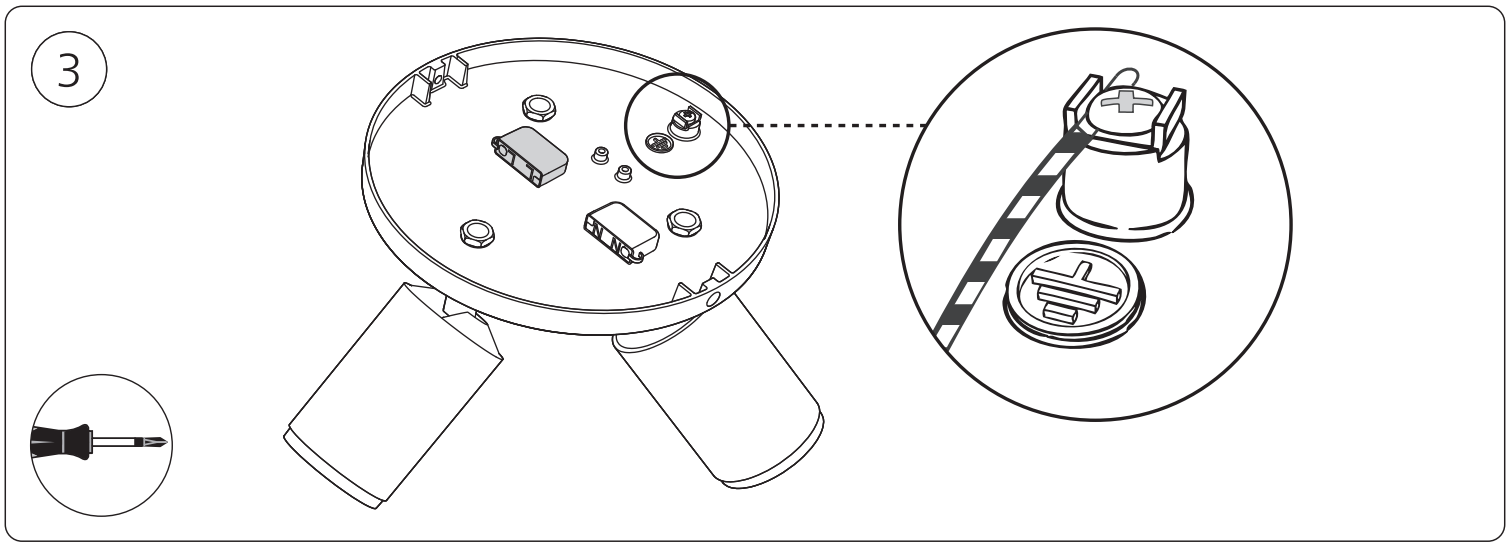
3

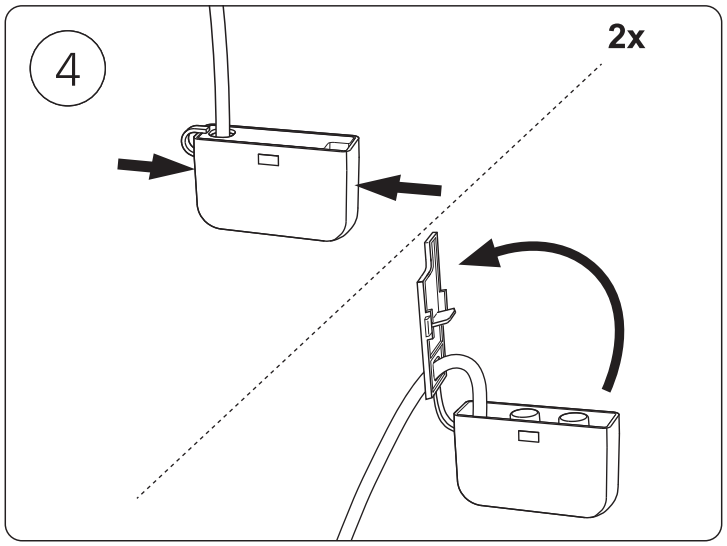
4
2x

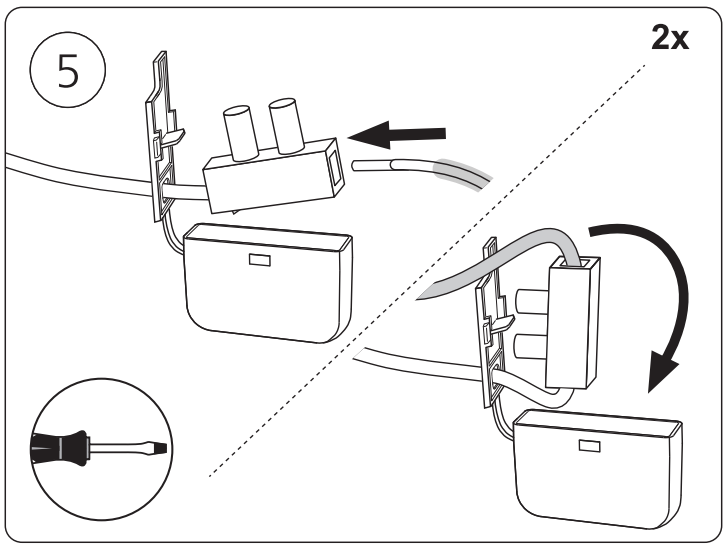
5
2x

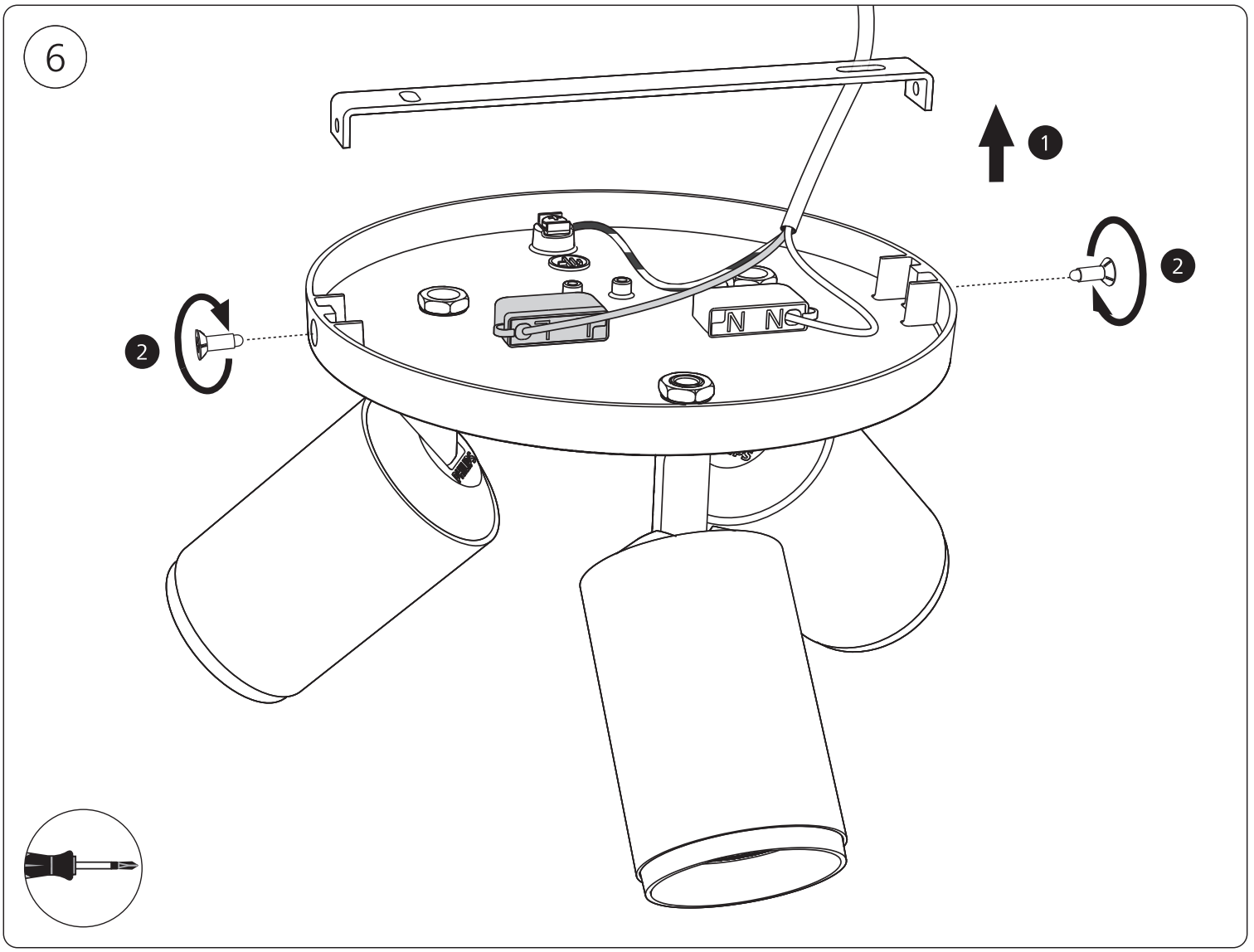
6
1
2
2
N
N

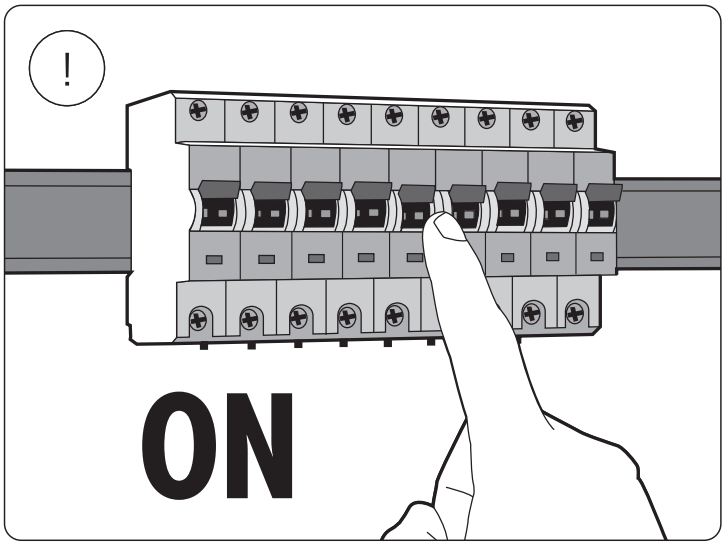
!
ON

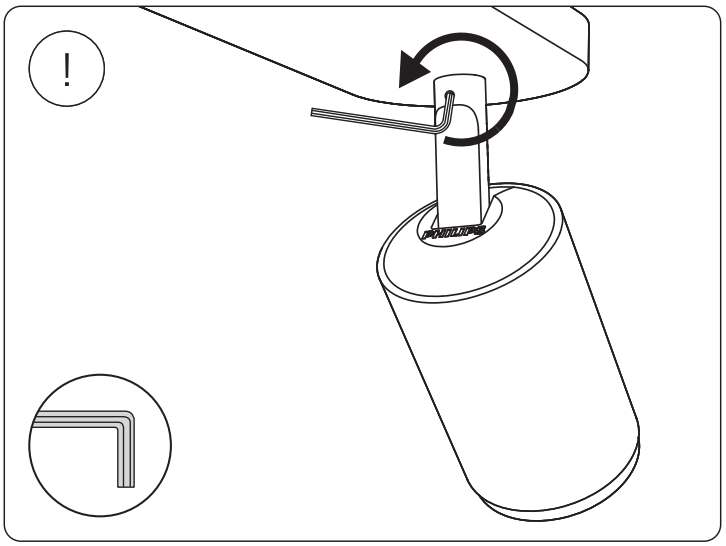

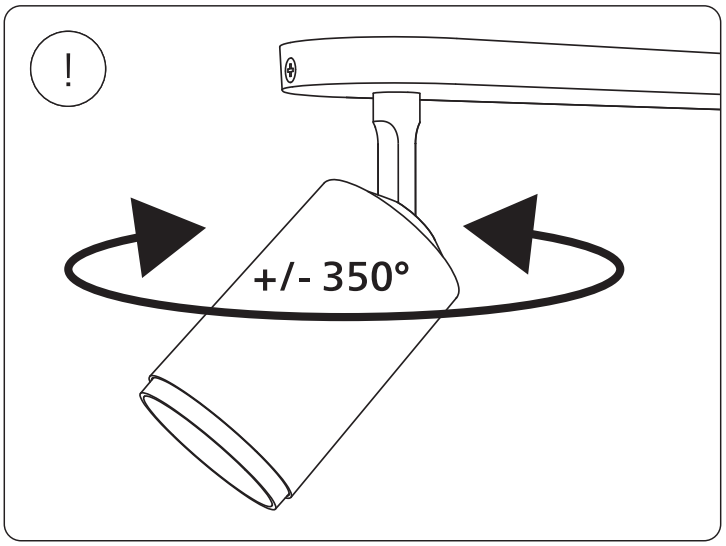
+/- 350°

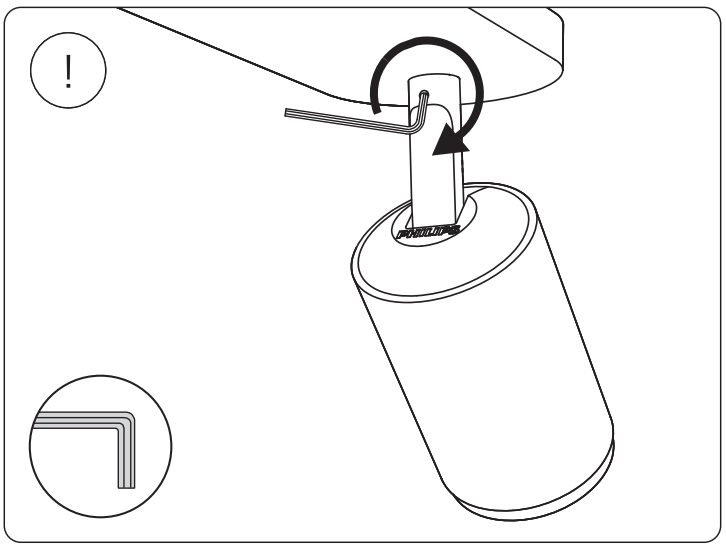

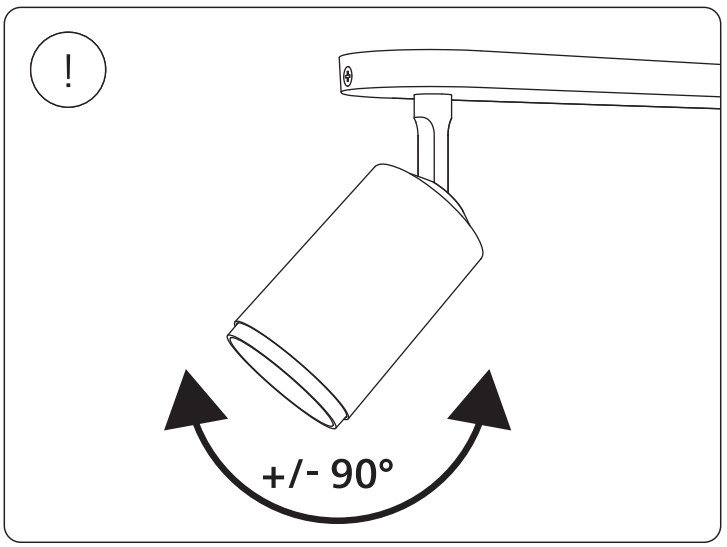
+/- 90°

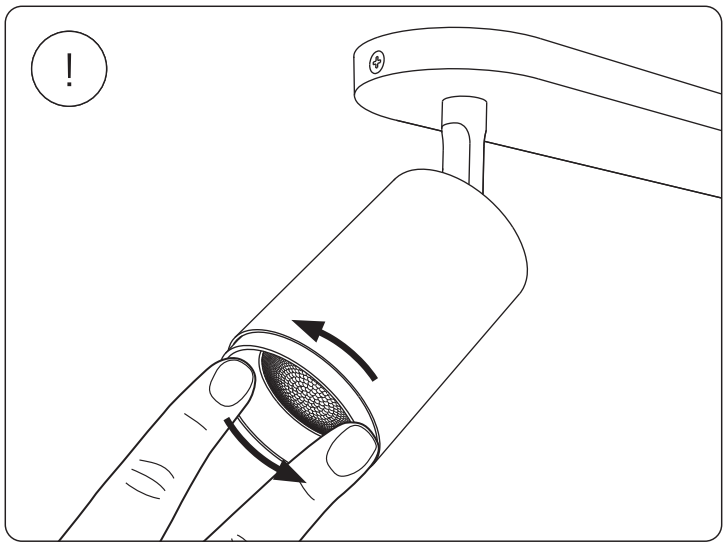

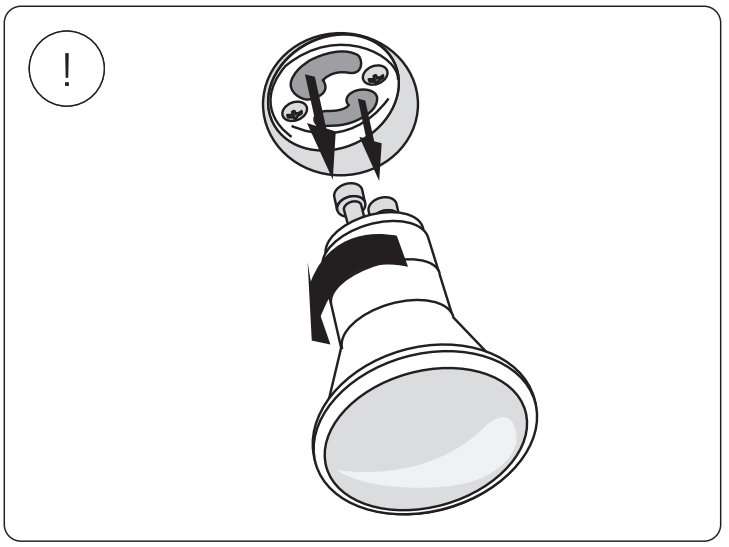

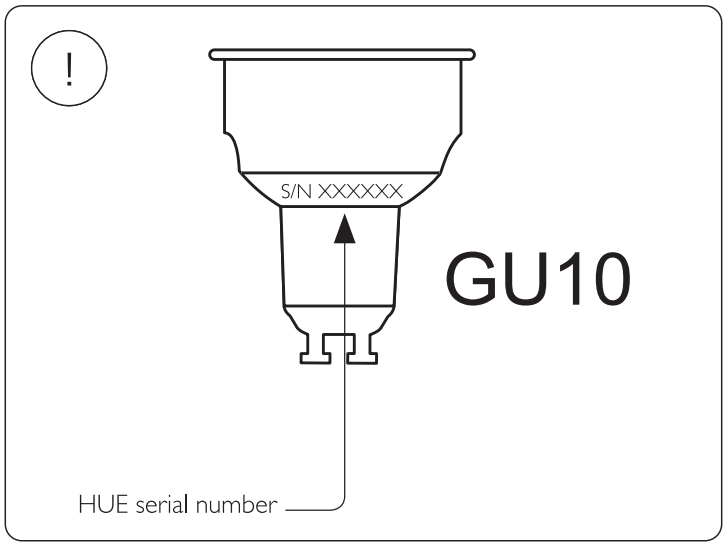
S/N XXXXXX
GU10
HUE serial number

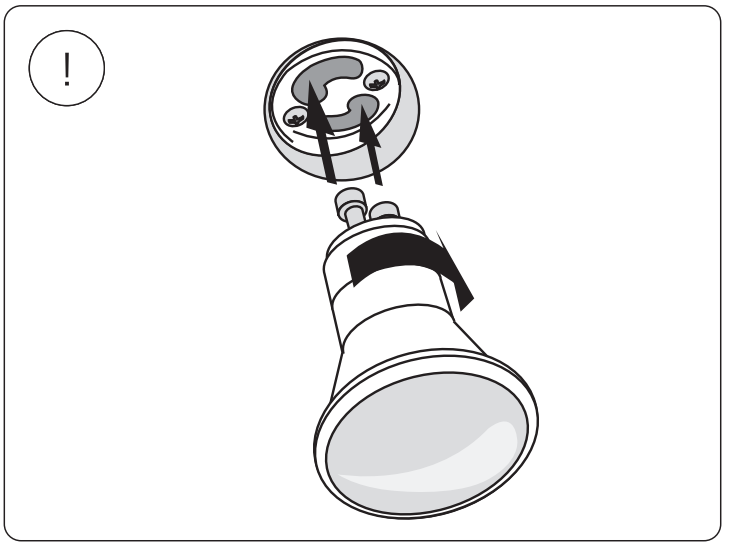

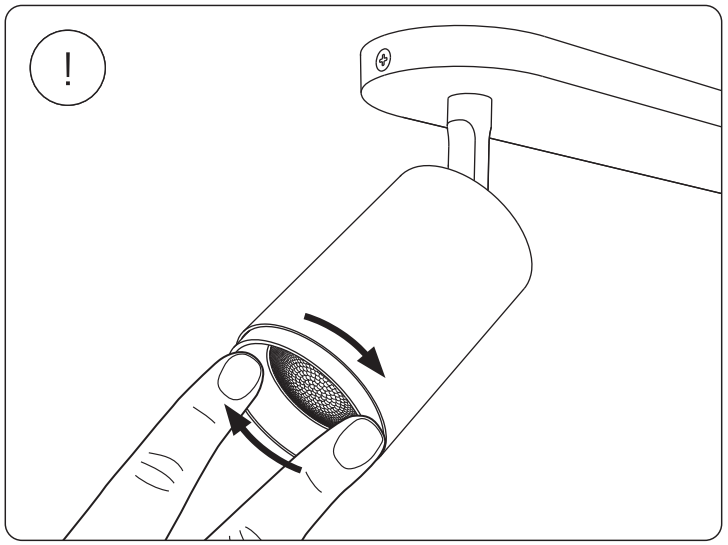

!

www.philips-hue.com/connectproduct

!

www.philips-hue.com

Signify
I.B.R.S. / C.C.R.I. Numéro 10461
5600 VB Eindhoven,
the Netherlands
00800-74454775

© 2024 Signify Holding
All rights reserved

Last update: 01/2024

www.philips-hue.com

440402911463