iQ100, telescopic cooker hood, 60 cm, Silver metallic
LI64MC521







The powerful telescopic cooker hood practically disappears into the upper cabinet.

- ✓ Extractor panel: Extendable part of a telescopic hood that captures steam and odors
- ✓ Brightness for inspired and hassle-free cooking
- ✓ LED light: Optimal visibility and atmosphere when cooking.
- ✓ Extended Spare Parts availability: Powering appliance endurance.

Features

Technical Data

Typology: ..... Pull-out
Length electrical supply cord: ..... 175 cm
Required niche size for installation (HxWxD): 162 x 526.0 x 290 mm
Height of the appliance: ..... 203 mm
Minimum distance above an electric hob: ..... 430 mm
Minimum distance above a gas hob: ..... 650 mm
Net weight: ..... 8.8 kg
Type of control: ..... mechanical
Number of speed settings: 3
Maximum output air extraction: ..... 394 m³/h
Maximum output recirculating air: ..... 238 m³/h
Maximum Air flow: ..... 394 m³/h
Number of lights: 2
Noise level: ..... 68 dB(A) re 1 pW
Diameter of air outlet: ..... 150 / 120 mm
Grease filter material: ..... Washable aluminium
EAN code: 4242003979181
Connection rating: ..... 108 W
Fuse protection: ..... 10 A
Voltage: ..... 220-240 V
Frequency: ..... 50 Hz
Installation typology: ..... Built-in

4 242003 979181

SIEMENS

iQ100, telescopic cooker hood, 60 cm, Silver metallic
LI64MC521

Features

Design:
- Telescopic hood, 60 cm
- For installation in a special wall cupboard (60 cm)
- Suitable for ducted or re-circulated extraction

Core Features:
- Capacitor motor
- 2 x 1,5W LED
- Colour Temperature: 3500 K
- Light Intensity: 131 lux
- 2 metal grease filter(s).

Comfort Features:
- Rocker switches for extractor speeds and light
- 3 speeds

Cleaning Comfort:
- Metal grease filter dishwasher-safe

Performance Exhaust:
- According to EN 61591 and EN/ IEC 60704-2-13 your appliance can achieve the following values in exhaust mode:
- Speed 1: extraction rate 276 m3/h; noise level 61 dB(A) re1pW
- Speed 2: extraction rate 336 m3/h; noise level 65 dB(A) re1pW
- Speed 3: extraction rate 394 m3/h; noise level 68 dB (A) re1pW
- Energy Efficiency Class: C (at a range of energy efficiency classes from A++ to E)
- Average Energy Consumption: 57.3 kWh/year
- Blower Efficiency Class: D
- Lighting Efficiency Class: A
- Grease Filtering Efficiency Class: B

Performance Recirculation:
- For recirculated extraction recirculating kit (accessory) needed
- According to EN 61591 and EN/ IEC 60704-2-13 your appliance can achieve the following values in recirculation mode with standard recirculation kit (available as optional accessory):
- Speed 1: extraction rate 190 m3/h; noise level 66 dB(A) re1pW
- Speed 2: extraction rate 220 m3/h; noise level 69 dB(A) re1pW)
- Speed 3: extraction rate 238 m3/h ; noise level 71 dB (A) re1pW)

Technical Information:
- Consumption data:
- Power rating: 108 W
- Voltage: 220 - 240 V
- Made in Germany

Planning and Installation Information:
- Dimensions (HxWxD): 203 x 598 x 290 mm
- built-in dimensions (HxWxD): 162 x 526 x 290 mm
- Electrical cable lenght 1.75 m
- Diameter pipe Ø 150 mm
- Stanless steel handle included

SIEMENS

iQ100, telescopic cooker hood, 60 cm, Silver metallic
LI64MC521

Dimensioned drawings

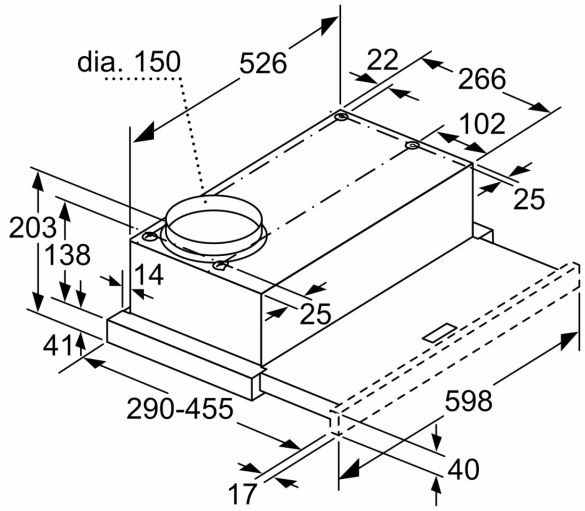

Not possible to adjust the depth of the filter pull-out

measurements in mm

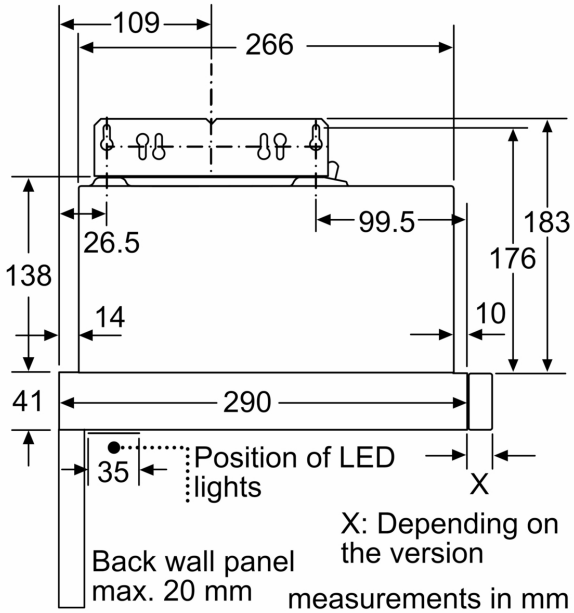

X: Depending on the version

measurements in mm

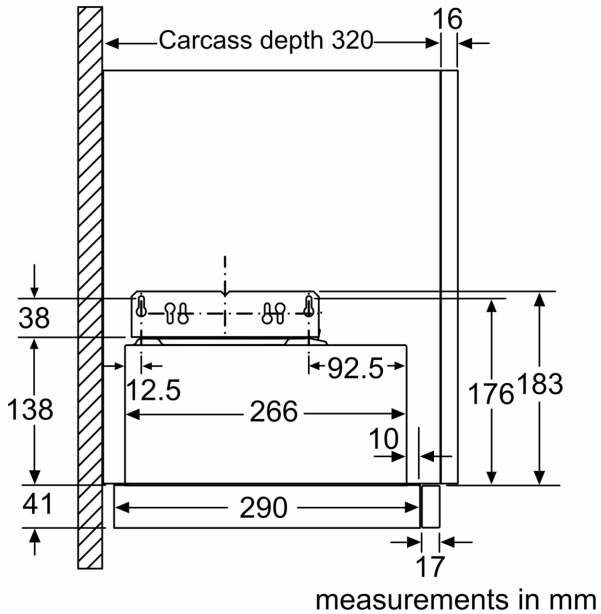

measurements in mm

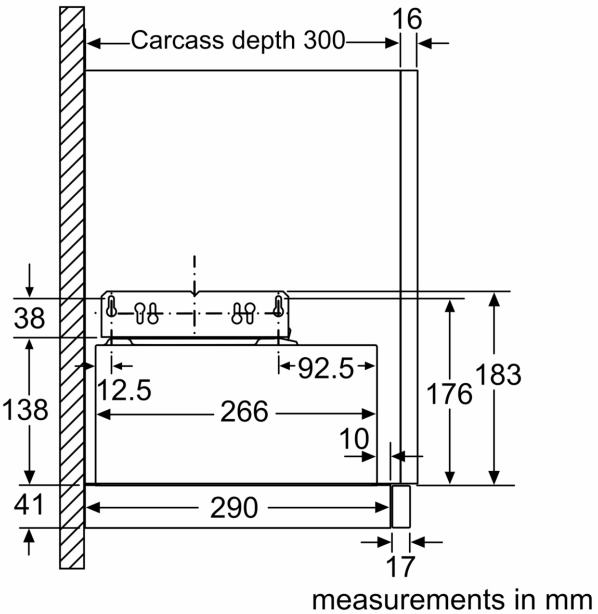

measurements in mm

SIEMENS

Dimensioned drawings

